# 数　量　総　括　表

工事名　　令8現建道整工9号　　市道横瀬旧道線他道路改良第1次工事

道路改良 1工区



| 工　種 | 種　別 | 細　別 | 規　格 | 単位 | 設計数量 | 計算数量 | 備　考 |
|---|---|---|---|---|---|---|---|
| 道路土工 | | | | | | | |
| | 本線土工 | | | | | | |
| | | 掘削 | | m3 | 270 | 270.4 | |
| | | 床掘 | | m3 | | 160.9 | 掘削に計上 |
| | | 盛土 | 転用土 | m3 | | 26.4 | 盛土法面整形に計上 |
| | | 路床盛土 | 置換土 | m3 | 200 | 200.3 | |
| | | 埋戻 | 転用土 | m3 | | 18.5 | 排水構造物の埋戻しに計上 |
| | | 土砂等運搬 | 路床盛土×1.11 | m3 | 220 | 222.3 | 土材料も |
| | | 切土法面整形 | | m2 | 5 | 4.9 | |
| | | 盛土法面整形 | | m2 | 130 | 132.9 | |
| | | 残土処理 | | m3 | 230 | 225.5 | 土砂運搬も |
| 舗装工 | | | | | | | |
| | AS舗装工 | | | | | | |
| | | 表層 | ⑨密粒度As(13F) t=4cm | m2 | 306 | 305.9 | |
| | | 下層路盤 | ARC-40　　t=16c | m2 | 306 | 305.9 | |
| | CO舗装工 | | | | | | |
| | | 表層 | コンクリート 18-8-25　t=10cm | m2 | 40 | 39.6 | 39.6×0.1 ≒4m³ |
| | | 路盤 | RC-40　　t=10cm | m2 | 40 | 39.6 | |
| | | | | | | | |
| 排水構造物工 | | | | | | | |
| | 作業土工 | | | | | | |
| | | 床掘 | | m3 | 20 | 21.9 | |
| | | 埋戻 | 転用土 | m3 | 30 | 30.4 | |
| | | ~~基面整正~~ | | ~~m2~~ | | ~~113.2~~ | 小規模のため計上しない |
| | | 残土処理 | | m3 | 10 | 10.0 | 土砂運搬も |
| | | | | | | | |
| | | | | | | | |

# 数　量　総　括　表

工事名　　令8現建道整工9号　　市道横瀬旧道線他道路改良第1次工事

道路改良 1工区



| 工　種 | 種　別 | 細　別 | 規　格 | 単位 | 設計数量 | 計算数量 | 備　考 |
|---|---|---|---|---|---|---|---|
| | 側溝工 | | | | | | |
| | | 自由勾配側溝 | FU-B300-C300 | m | 139 | 138.5 | |
| | | | ~~FU-B300-C400~~ | ~~m~~ | | ~~86.5~~ | 工区外のため計上しない |
| | | | ~~FU-B300-C500~~ | ~~m~~ | | ~~45.6~~ | 工区外のため計上しない |
| | | | ~~FU-B300-C600~~ | ~~m~~ | | ~~10.0~~ | 工区外のため計上しない |
| | | | ~~FU-B300-C700~~ | ~~m~~ | | ~~2.5~~ | 工区外のため計上しない |
| | | 蓋版 | 車道用 300用(L=500) | 枚 | 28 | 28 | Gr |
| | | 蓋版 | 車道用 300用(L=500) | 枚 | 111 | 111 | Co |
| | | 自由勾配側溝調整コンクリート | 18-8-25 | m3 | 2 | 2.3 | 自由勾配側溝に含まれる |
| | | 横断自由勾配側溝 | 横断FU-B300-C300 | m | 8 | 7.5 | |
| | | 蓋版 | グレーチング蓋版300用 | 枚 | 4 | 4 | |
| | | 横断自由勾配側溝調整コンクリート | 18-8-25 | m3 | 0.1 | 0.1 | 自由勾配側溝に含まれる |
| | | L型側溝 | PL2-B250B | m | 5 | 5.4 | |
| | | ~~ベンチフリューム~~ | ~~BF-I-300~~ | ~~m~~ | | ~~4.0~~ | 工区外のため計上しない |
| | | | BF-I-350 | m | 4 | 4.3 | 既設付設替 |
| | 管渠工 | | | | | | |
| | | 横断暗渠 | CSB-I-250 | m | 4 | 4.2 | |
| | | | CSB-I-300 | m | 13 | 13.4 | |
| | | | ~~CSB-I-350~~ | ~~m~~ | | ~~11.0~~ | 工区外のため計上しない |
| | | | CSB-I-600 | m | 5 | 4.8 | |
| | | ~~排水取水管~~ | ~~VP150~~ | ~~m~~ | | ~~1.8~~ | 工区外のため計上しない |
| | 集水桝工 | | | | | | |
| | | 集水桝 | M1-B500×L500×H600 | 基 | 2 | 2 | |
| | | | M1-B500×L500×H1000 | 基 | 1 | 1 | |
| | | | ~~M1-B600×L600×H600~~ | ~~基~~ | | ~~4~~ | 工区外のため計上しない |
| | | | ~~M1-B600×L600×H700~~ | ~~基~~ | | ~~1~~ | 工区外のため計上しない |
| | | | ~~M1-B600×L600×H800~~ | ~~基~~ | | ~~1~~ | 工区外のため計上しない |
| | | | M1-B600×L900×H1000 | 基 | 2 | 2 | |

# 数　量　総　括　表

令8現建道整工9号　　市道横瀬旧道線他道路改良第1次工事

道路改良 1工区



| 工　種 | 種　別 | 細　別 | 規　格 | 単位 | 設計数量 | 計算数量 | 備　考 |
|---|---|---|---|---|---|---|---|
| | 集水桝工 | | | | | | |
| | | 集水桝 | M1-B700×L700×H1200 | 基 | 1 | 1 | |
| | | | ~~M1-B300×L400×H500~~ | ~~基~~ | | ~~1~~ | 工区外のため計上しない |
| | | 蓋版 | SG3-B500×500 | 枚 | 3 | 3 | 集水桝に含まれる |
| | | | ~~SG3-B600×600~~ | ~~枚~~ | | ~~6~~ | 工区外のため計上しない |
| | | | SG3-B600×900 | 枚 | 2 | 2 | 集水桝に含まれる |
| | | | SG3-B700×700 | 枚 | 1 | 1 | 集水桝に含まれる |
| | | | ~~SG3-B300×400~~ | ~~枚~~ | | ~~1~~ | 工区外のため計上しない |
| | | | | | | | |
| ~~縁石工~~ | | | | | | | |
| | ~~作業土工~~ | | | | | | |
| | | ~~基面整正~~ | | ~~m2~~ | | ~~2.4~~ | 工区外のため計上しない |
| | ~~縁石工~~ | | | | | | |
| | | ~~歩車道境界ブロック~~ | ~~Fb-30~~ | ~~m~~ | | ~~9.0~~ | 工区外のため計上しない |
| | | | | | | | |
| マンホール工 | | | | | | | |
| | マンホール高調整工 | | | | | | |
| | | マンホール高調整 | | 箇所 | 2 | 2 | GW局に依頼 |
| | | | | | | | |
| 消雪施設工 | | | | | | | |
| | 作業土工 | 床掘 | | m3 | 1 | 1.4 | 住宅消雪パイプ |
| | | 埋戻 | 転用土 | m3 | 0.5 | 0.5 | 住宅消雪パイプ |
| | | 埋戻 | 山砂 | m3 | 1 | 1.0 | 住宅消雪パイプ |
| | | 残土処理 | | m3 | 0.9 | 0.9 | 住宅消雪パイプ土砂運搬も |
| | ~~散水管配管~~ | | | | | | |
| | | ~~散水管~~ | ~~B300×H300　Φ50~~ | ~~m~~ | | ~~6.6~~ | 工区外のため計上しない |
| | | | | | | | |

# 数　量　総　括　表

令8現建道整工9号　　市道横瀬旧道線他道路改良第1次工事

道路改良 1工区



| 工　種 | 種　別 | 細　別 | 規　格 | 単位 | 設計数量 | 計算数量 | 備　考 |
|---|---|---|---|---|---|---|---|
| | 送水管配管 | | | | | | |
| | | 送水管 | HIVP-50A | m | 6 | 5.5 | |
| | | 継手材 | HI90° L-50A | 個 | 2 | 2 | |
| | | | ストラブ・グリップ316-50E | 個 | 2 | 2 | |
| | ~~既設設備撤去~~ | | | | | | |
| | | ~~既設設備撤去~~ | ~~取水ポンプ3.7kW ケーシング口径 900mm~~ | ~~式~~ | | ~~1~~ | 工区外のため 計上しない |
| | | | | | | | |
| ~~道路付属施設工~~ | ~~道路付属物工~~ | | | | | | |
| | | ~~照明工~~ | ~~照明灯~~ | ~~基~~ | | ~~1~~ | 工区外のため 計上しない |
| | | | ~~カーブミラー~~ | ~~基~~ | | ~~1~~ | 工区外のため 計上しない |
| | | | | | | | |
| | 構造物取壊し工 | | | | | | |
| 構造物撤去工 | | 舗装版取壊し | AS舗装 t= 4cm | m2 | 300 | 295.8 | 廃材 295.8×0.05=15㎥ 15*2.35≒35ｔ |
| | | | CO舗装 t=10cm | m2 | 100 | 99.5 | 廃材(無筋Co想定) 99.5×0.1≒10㎥ 10×2.5≒25ｔ |
| | | 舗装版切断 | AS舗装 t= 4cm | m | 27 | 26.5 | |
| | | | CO舗装　t=10cm | m | 30 | 30.0 | |
| | | 濁水処理運搬工 | | 式 | 1 | 1.0 | As |
| | | 濁水処理運搬工 | | 式 | 1 | 1.0 | Co |
| | | コンクリート構造物取壊し | 有筋 | m3 | 10 | 9.5 | 廃材 9.5×2.5≒24ｔ |
| | | | 無筋 | m3 | 1 | 1.2 | 廃材 1.2×2.35≒3ｔ |
| | 排水構造物撤去工 | | | | | | |
| | | U型側溝撤去 | プレキャスト | m | 12 | 12.1 | 0.9　m3 |
| | | 蓋版撤去 | プレキャスト | 枚 | 4 | 4 | 0.1　m3 |
| | | ~~L型側溝撤去~~ | ~~プレキャスト~~ | ~~m~~ | | ~~94.0~~ | ~~2.8　m3~~ |
| | | ヒューム管撤去 | プレキャスト | m | 4 | 4.2 | 0.1　m3 |
| | | 組合せ暗渠撤去 | プレキャスト | m | 4 | 3.9 | 1.4　m3 |
| | | ~~集水桝撤去~~ | ~~プレキャスト~~ | ~~基~~ | | ~~2~~ | ~~0.2　m3~~ |
| | | 殻運搬 | 二次製品 | ㎥ | 3 | 2.5 | 廃材 2.5×2.5≒6ｔ |
| | ~~縁石撤去工~~ | | | | | | |
| | | ~~歩車道境界ブロック撤去~~ | ~~プレキャスト~~ | ~~m~~ | | ~~9.0~~ | ~~0.5　m3~~ |

# 土工数量集計表

1工区

| 細　別 | 規　格 | 単位 | 種　別 | | | | | | 合計 |
|---|---|---|---|---|---|---|---|---|---|
| | | | 本線土工 | 作業土工 | | | | | |
| | | | | 側溝工 | 管渠工 | 集水桝工 | ~~縁石工~~ | 送水管配管 | |
| 掘削 | | m3 | 109.5 | | | | | | 109.5 |
| 床掘 | | m3 | 160.9 | | | 21.9 | | 1.4 | 184.2 |
| 盛土 | 転用土 | m3 | 26.4 | | | | | | 26.4 |
| 路床盛土 | 置換土 | m3 | 200.3 | | | | | | 200.3 |
| 埋戻 | 転用土 | m3 | 18.5 | | | 11.9 | | 0.5 | 30.9 |
| 埋戻 | 山砂 | m3 | | | | | | 1.0 | 1.0 |
| 切土法面整形 | | m2 | 4.9 | | | | | | 4.9 |
| 盛土法面整形 | | m2 | 106.5 | | | | | | 106.5 |
| 基面整正 | | m2 | | 92.7 | 14.1 | 6.4 | ~~2.4~~ | | 113.2 |
| 残土処理 | | m3 | 225.5 | | | 10.0 | | 0.9 | 236.4 |

# 道路土工数量調書

工種　　道路土工

1工区

| 種　別 | 細　別 | 規　格 | 単　位 | 数　量 | 備　考 |
|---|---|---|---|---|---|
| 本線土工 | | | | | |
| | 掘削 | | m3 | 109.5 | |
| | 床掘 | | m3 | 160.9 | 掘削として計上 |
| | 盛土 | 転用土 | m3 | 26.4 | |
| | 路床盛土 | 置換土 | m3 | 200.3 | |
| | 埋戻 | 転用土 | m3 | 18.5 | |
| | 切土法面整形 | | m2 | 4.9 | |
| | 盛土法面整形 | | m2 | 106.5 | |
| | 残土処理 | | m3 | 225.5 | 109.5+160.9<br>-26.4-18.5=225.5 |
| | | | | | |
| | | | | | |
| | | | | | |
| | | | | | |
| | | | | | |
| | | | | | |
| | | | | | |
| | | | | | |
| | | | | | |
| | | | | | |
| | | | | | |
| | | | | | |

# 本線土工図

本線土工　　一式当り

## 土工図

略　図

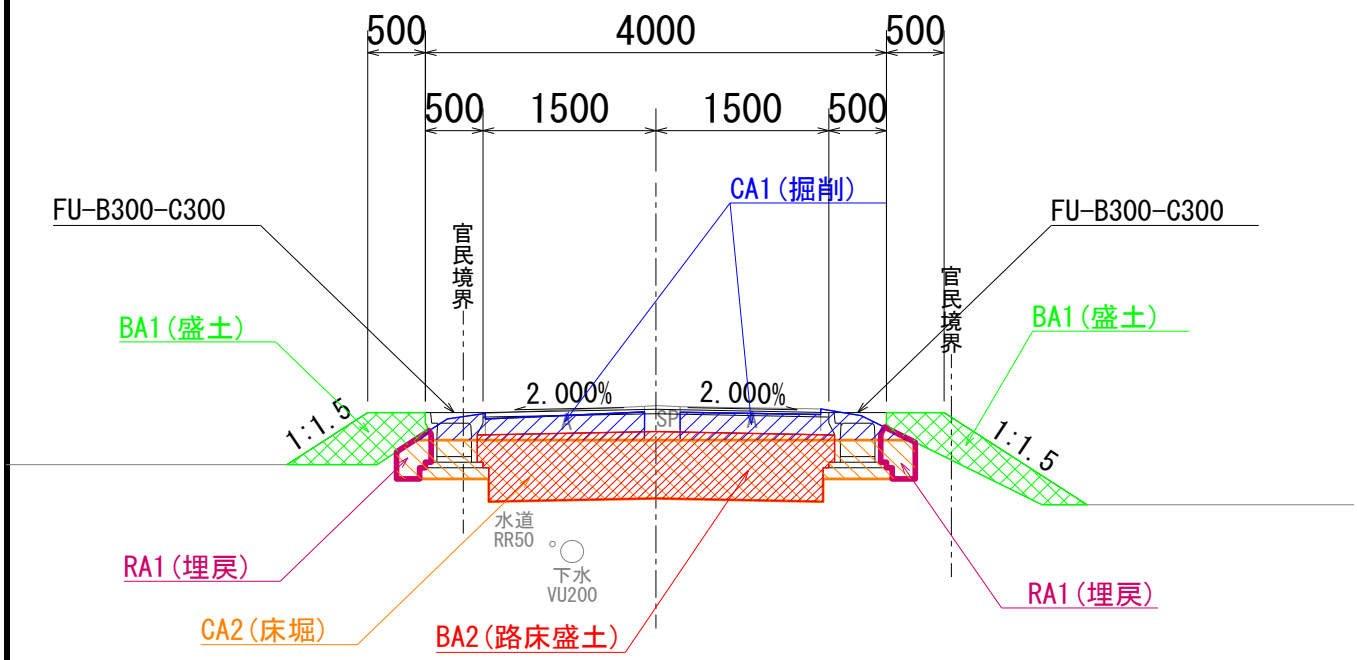

# 本線土工数量計算書



| 測　点 | 距　離 | 掘削　(CA1) | | | 床掘　(CA2) | | |
|---|---|---|---|---|---|---|---|
| | | 面　積 | 平均面積 | 体　積 | 面　積 | 平均面積 | 体　積 |
| ~~NO.0~~ | | ~~1.0~~ | | | ~~1.5~~ | | |
| | ~~10.000~~ | | ~~0.95~~ | ~~9.5~~ | | ~~1.70~~ | ~~17.0~~ |
| ~~NO.0+10.00~~ | | ~~0.9~~ | | | ~~1.9~~ | | |
| | ~~10.000~~ | | ~~0.85~~ | ~~8.5~~ | | ~~1.95~~ | ~~19.5~~ |
| ~~NO.1~~ | | ~~0.8~~ | | | ~~2.0~~ | | |
| | ~~10.000~~ | | ~~0.85~~ | ~~8.5~~ | | ~~2.00~~ | ~~20.0~~ |
| ~~NO.1+10.00~~ | | ~~0.9~~ | | | ~~2.0~~ | | |
| | ~~10.000~~ | | ~~0.95~~ | ~~9.5~~ | | ~~1.90~~ | ~~19.0~~ |
| ~~NO.2~~ | | ~~1.0~~ | | | ~~1.8~~ | | |
| | ~~10.000~~ | | ~~1.00~~ | ~~10.0~~ | | ~~1.70~~ | ~~17.0~~ |
| ~~NO.2+10.00~~ | | ~~1.0~~ | | | ~~1.6~~ | | |
| | ~~11.390~~ | | ~~1.15~~ | ~~13.1~~ | | ~~2.40~~ | ~~27.3~~ |
| ~~(NO.3+1.39)~~ | | ~~1.3~~ | | | ~~3.2~~ | | |
| | | | | | | | |
| ~~NO.3+8.30~~ | | ~~2.6~~ | | | ~~6.5~~ | | |
| | ~~11.700~~ | | ~~1.70~~ | ~~19.9~~ | | ~~3.90~~ | ~~45.6~~ |
| ~~NO.4~~ | | ~~0.8~~ | | | ~~1.3~~ | | |
| | ~~20.000~~ | | ~~0.80~~ | ~~16.0~~ | | ~~1.70~~ | ~~34.0~~ |
| ~~NO.5~~ | | ~~0.8~~ | | | ~~2.1~~ | | |
| | ~~9.000~~ | | ~~0.90~~ | ~~8.1~~ | | ~~2.10~~ | ~~18.9~~ |
| ~~NO.5+9.00~~ | | ~~1.0~~ | | | ~~2.1~~ | | |
| | ~~11.000~~ | | ~~0.95~~ | ~~10.5~~ | | ~~2.05~~ | ~~22.6~~ |
| ~~NO.6~~ | | ~~0.9~~ | | | ~~2.0~~ | | |
| | ~~10.000~~ | | ~~1.00~~ | ~~10.0~~ | | ~~2.05~~ | ~~20.5~~ |
| ~~NO.6+10.00~~ | | ~~1.1~~ | | | ~~2.1~~ | | |
| | ~~10.000~~ | | ~~1.05~~ | ~~10.5~~ | | ~~2.00~~ | ~~20.0~~ |
| ~~NO.7~~ | | ~~1.0~~ | | | ~~1.9~~ | | |
| | ~~10.000~~ | | ~~1.00~~ | ~~10.0~~ | | ~~1.95~~ | ~~19.5~~ |
| ~~NO.7+10.00~~ | | ~~1.0~~ | | | ~~2.0~~ | | |
| | ~~10.000~~ | | ~~0.95~~ | ~~9.5~~ | | ~~1.95~~ | ~~19.5~~ |
| ~~NO.8~~ | | ~~0.9~~ | | | ~~1.9~~ | | |
| | ~~1.120~~ | | ~~0.95~~ | ~~1.1~~ | | ~~1.85~~ | ~~2.1~~ |
| ~~BC2~~ | | ~~1.0~~ | | | ~~1.8~~ | | |
| | ~~14.256~~ | | ~~0.80~~ | ~~11.4~~ | | ~~2.55~~ | ~~36.4~~ |
| ~~SP2~~ | | ~~0.6~~ | | | ~~3.3~~ | | |
| | ~~4.624~~ | | ~~0.70~~ | ~~3.2~~ | | ~~3.50~~ | ~~16.2~~ |
| ~~NO.9~~ | | ~~0.8~~ | | | ~~3.7~~ | | |
| | ~~9.631~~ | | ~~0.85~~ | ~~8.2~~ | | ~~3.80~~ | ~~36.6~~ |
| ~~EC2~~ | | ~~0.9~~ | | | ~~3.9~~ | | |
| | ~~10.369~~ | | ~~1.25~~ | ~~13.0~~ | | ~~3.45~~ | ~~35.8~~ |
| ~~NO.10~~ | | ~~1.6~~ | | | ~~3.0~~ | | |
| | ~~2.480~~ | | ~~1.55~~ | ~~3.8~~ | | ~~2.85~~ | ~~7.1~~ |
| (NO.10+2.48) | | 1.5 | | | 2.7 | | |
| | 17.520 | | 1.10 | 19.3 | | 1.60 | 28.0 |
| NO.11 | | 0.7 | | | 0.5 | | |
| | 13.289 | | 0.90 | 12.0 | | 1.45 | 19.3 |
| BC3 | | 1.1 | | | 2.4 | | |
| | 6.704 | | 1.05 | 7.0 | | 2.25 | 15.1 |
| SP3 | | 1.0 | | | 2.1 | | |
| | 0.007 | | 1.00 | 0.0 | | 2.10 | 0.0 |
| NO.12 | | 1.0 | | | 2.1 | | |
| | 6.696 | | 1.10 | 7.4 | | 1.95 | 13.1 |
| EC3 | | 1.2 | | | 1.8 | | |
| | 3.647 | | 1.20 | 4.4 | | 1.75 | 6.4 |
| BC4 | | 1.2 | | | 1.7 | | |
| | 8.318 | | 0.60 | 5.0 | | 0.85 | 7.1 |
| SP4 | | 0.0 | | | 0.0 | | |
| | 1.339 | | 0.50 | 0.7 | | 0.65 | 0.9 |
| NO.13 | | 1.0 | | | 1.3 | | |
| | 6.978 | | 1.00 | 7.0 | | 1.45 | 10.1 |
| EC4 | | 1.0 | | | 1.6 | | |
| | 13.022 | | 1.00 | 13.0 | | 1.65 | 21.5 |
| NO.14 | | 1.0 | | | 1.7 | | |
| | 12.572 | | 1.05 | 13.2 | | 1.20 | 15.1 |
| BC5 | | 1.1 | | | 0.7 | | |
| | 4.881 | | 1.10 | 5.4 | | 0.60 | 2.9 |
| SP5 | | 1.1 | | | 0.5 | | |
| | 2.547 | | 1.35 | 3.4 | | 1.00 | 2.5 |
| NO.15 | | 1.6 | | | 1.5 | | |
| | 2.335 | | 3.10 | 7.2 | | 4.60 | 10.7 |
| EC5 | | 4.6 | | | 7.7 | | |
| | 0.926 | | 4.85 | 4.5 | | 8.85 | 8.2 |
| EP | | 5.1 | | | 10.0 | | |
| 合　計 | 100.781 | | | 109.5 | | | 160.9 |

# 本線土工数量計算書



| 測　点 | 距　離 | 盛土　(BA1) | | | 路床盛土　(BA2) | | |
|---|---|---|---|---|---|---|---|
| | | 面　積 | 平均面積 | 体　積 | 面　積 | 平均面積 | 体　積 |
| ~~NO.0~~ | | ~~0.0~~ | | | ~~1.8~~ | | |
| | ~~10.000~~ | | ~~0.05~~ | ~~0.5~~ | | ~~1.80~~ | ~~18.0~~ |
| ~~NO.0+10.00~~ | | ~~0.1~~ | | | ~~1.8~~ | | |
| | ~~10.000~~ | | ~~0.10~~ | ~~1.0~~ | | ~~1.80~~ | ~~18.0~~ |
| ~~NO.1~~ | | ~~0.1~~ | | | ~~1.8~~ | | |
| | ~~10.000~~ | | ~~0.10~~ | ~~1.0~~ | | ~~1.80~~ | ~~18.0~~ |
| ~~NO.1+10.00~~ | | ~~0.1~~ | | | ~~1.8~~ | | |
| | ~~10.000~~ | | ~~0.05~~ | ~~0.5~~ | | ~~1.80~~ | ~~18.0~~ |
| ~~NO.2~~ | | ~~0.0~~ | | | ~~1.8~~ | | |
| | ~~10.000~~ | | ~~0.00~~ | ~~0.0~~ | | ~~1.80~~ | ~~18.0~~ |
| ~~NO.2+10.00~~ | | ~~0.0~~ | | | ~~1.8~~ | | |
| | ~~11.390~~ | | ~~0.00~~ | ~~0.0~~ | | ~~2.95~~ | ~~33.6~~ |
| ~~(NO.3+1.39)~~ | | ~~0.0~~ | | | ~~4.1~~ | | |
| | | | | | | | |
| ~~NO.3+8.30~~ | | ~~0.0~~ | | | ~~7.3~~ | | |
| | ~~11.700~~ | | ~~0.90~~ | ~~10.5~~ | | ~~4.55~~ | ~~53.2~~ |
| ~~NO.4~~ | | ~~1.8~~ | | | ~~1.8~~ | | |
| | ~~20.000~~ | | ~~1.30~~ | ~~26.0~~ | | ~~1.80~~ | ~~36.0~~ |
| ~~NO.5~~ | | ~~0.8~~ | | | ~~1.8~~ | | |
| | ~~9.000~~ | | ~~0.50~~ | ~~4.5~~ | | ~~1.80~~ | ~~16.2~~ |
| ~~NO.5+9.00~~ | | ~~0.2~~ | | | ~~1.8~~ | | |
| | ~~11.000~~ | | ~~0.15~~ | ~~1.7~~ | | ~~1.80~~ | ~~19.8~~ |
| ~~NO.6~~ | | ~~0.1~~ | | | ~~1.8~~ | | |
| | ~~10.000~~ | | ~~0.05~~ | ~~0.5~~ | | ~~1.80~~ | ~~18.0~~ |
| ~~NO.6+10.00~~ | | ~~0.0~~ | | | ~~1.8~~ | | |
| | ~~10.000~~ | | ~~0.00~~ | ~~0.0~~ | | ~~1.80~~ | ~~18.0~~ |
| ~~NO.7~~ | | ~~0.0~~ | | | ~~1.8~~ | | |
| | ~~10.000~~ | | ~~0.00~~ | ~~0.0~~ | | ~~1.80~~ | ~~18.0~~ |
| ~~NO.7+10.00~~ | | ~~0.0~~ | | | ~~1.8~~ | | |
| | ~~10.000~~ | | ~~0.00~~ | ~~0.0~~ | | ~~1.80~~ | ~~18.0~~ |
| ~~NO.8~~ | | ~~0.0~~ | | | ~~1.8~~ | | |
| | ~~1.120~~ | | ~~0.00~~ | ~~0.0~~ | | ~~1.80~~ | ~~2.0~~ |
| ~~BC2~~ | | ~~0.0~~ | | | ~~1.8~~ | | |
| | ~~14.256~~ | | ~~0.00~~ | ~~0.0~~ | | ~~2.25~~ | ~~32.1~~ |
| ~~SP2~~ | | ~~0.0~~ | | | ~~2.7~~ | | |
| | ~~4.624~~ | | ~~0.00~~ | ~~0.0~~ | | ~~2.60~~ | ~~12.0~~ |
| ~~NO.9~~ | | ~~0.0~~ | | | ~~2.5~~ | | |
| | ~~9.631~~ | | ~~0.00~~ | ~~0.0~~ | | ~~2.30~~ | ~~22.2~~ |
| ~~EC2~~ | | ~~0.0~~ | | | ~~2.1~~ | | |
| | ~~10.369~~ | | ~~0.00~~ | ~~0.0~~ | | ~~2.10~~ | ~~21.8~~ |
| ~~NO.10~~ | | ~~0.0~~ | | | ~~2.1~~ | | |
| | 2.480 | | ~~0.00~~ | ~~0.0~~ | | ~~2.00~~ | ~~5.0~~ |
| (NO.10+2.48) | | 0.0 | | | 1.9 | | |
| | 17.520 | | 0.00 | 0.0 | | 1.30 | 22.8 |
| NO.11 | | 0.0 | | | 0.7 | | |
| | 13.289 | | 0.20 | 2.7 | | 1.25 | 16.6 |
| BC3 | | 0.4 | | | 1.8 | | |
| | 6.704 | | 0.50 | 3.4 | | 1.80 | 12.1 |
| SP3 | | 0.6 | | | 1.8 | | |
| | 0.007 | | 0.60 | 0.0 | | 1.80 | 0.0 |
| NO.12 | | 0.6 | | | 1.8 | | |
| | 6.696 | | 0.55 | 3.7 | | 1.80 | 12.1 |
| EC3 | | 0.5 | | | 1.8 | | |
| | 3.647 | | 0.45 | 1.6 | | 1.80 | 6.6 |
| BC4 | | 0.4 | | | 1.8 | | |
| | 8.318 | | 0.20 | 1.7 | | 1.80 | 15.0 |
| SP4 | | 0.0 | | | 1.8 | | |
| | 1.339 | | 0.05 | 0.1 | | 1.80 | 2.4 |
| NO.13 | | 0.1 | | | 1.8 | | |
| | 6.978 | | 0.10 | 0.7 | | 1.80 | 12.6 |
| EC4 | | 0.1 | | | 1.8 | | |
| | 13.022 | | 0.10 | 1.3 | | 1.80 | 23.4 |
| NO.14 | | 0.1 | | | 1.8 | | |
| | 12.572 | | 0.30 | 3.8 | | 1.80 | 22.6 |
| BC5 | | 0.5 | | | 1.8 | | |
| | 4.881 | | 0.75 | 3.7 | | 2.70 | 13.2 |
| SP5 | | 1.0 | | | 3.6 | | |
| | 2.547 | | 1.00 | 2.5 | | 4.70 | 12.0 |
| NO.15 | | 1.0 | | | 5.8 | | |
| | 2.335 | | 0.50 | 1.2 | | 7.95 | 18.6 |
| EC5 | | 0.0 | | | 10.1 | | |
| | 0.926 | | 0.00 | 0.0 | | 11.10 | 10.3 |
| EP | | 0.0 | | | 12.1 | | |
| 合　計 | 100.781 | | | 26.4 | | | 200.3 |

# 本線土工数量計算書



| 測　点 | 距　離 | 埋戻　(RA1) | | | | | |
|---|---|---|---|---|---|---|---|
| | | 面　積 | 平均面積 | 体　積 | 面　積 | 平均面積 | 体　積 |
| ~~NO.0~~ | | ~~0.0~~ | | | | | |
| | ~~10.000~~ | | ~~0.15~~ | ~~1.5~~ | | | |
| ~~NO.0+10.00~~ | | ~~0.3~~ | | | | | |
| | ~~10.000~~ | | ~~0.35~~ | ~~3.5~~ | | | |
| ~~NO.1~~ | | ~~0.4~~ | | | | | |
| | ~~10.000~~ | | ~~0.40~~ | ~~4.0~~ | | | |
| ~~NO.1+10.00~~ | | ~~0.4~~ | | | | | |
| | ~~10.000~~ | | ~~0.40~~ | ~~4.0~~ | | | |
| ~~NO.2~~ | | ~~0.4~~ | | | | | |
| | ~~10.000~~ | | ~~0.35~~ | ~~3.5~~ | | | |
| ~~NO.2+10.00~~ | | ~~0.3~~ | | | | | |
| | ~~11.390~~ | | ~~0.15~~ | ~~1.7~~ | | | |
| ~~(NO.3+1.39)~~ | | ~~0.0~~ | | | | | |
| | | | | | | | |
| ~~NO.3+8.30~~ | | ~~0.0~~ | | | | | |
| | ~~11.700~~ | | ~~0.05~~ | ~~0.6~~ | | | |
| ~~NO.4~~ | | ~~0.1~~ | | | | | |
| | ~~20.000~~ | | ~~0.15~~ | ~~3.0~~ | | | |
| ~~NO.5~~ | | ~~0.2~~ | | | | | |
| | ~~9.000~~ | | ~~0.25~~ | ~~2.3~~ | | | |
| ~~NO.5+9.00~~ | | ~~0.3~~ | | | | | |
| | ~~11.000~~ | | ~~0.25~~ | ~~2.8~~ | | | |
| ~~NO.6~~ | | ~~0.2~~ | | | | | |
| | ~~10.000~~ | | ~~0.25~~ | ~~2.5~~ | | | |
| ~~NO.6+10.00~~ | | ~~0.3~~ | | | | | |
| | ~~10.000~~ | | ~~0.30~~ | ~~3.0~~ | | | |
| ~~NO.7~~ | | ~~0.3~~ | | | | | |
| | ~~10.000~~ | | ~~0.25~~ | ~~2.5~~ | | | |
| ~~NO.7+10.00~~ | | ~~0.2~~ | | | | | |
| | ~~10.000~~ | | ~~0.25~~ | ~~2.5~~ | | | |
| ~~NO.8~~ | | ~~0.3~~ | | | | | |
| | ~~1.120~~ | | ~~0.30~~ | ~~0.3~~ | | | |
| ~~BC2~~ | | ~~0.3~~ | | | | | |
| | ~~14.256~~ | | ~~0.25~~ | ~~3.6~~ | | | |
| ~~SP2~~ | | ~~0.2~~ | | | | | |
| | ~~4.624~~ | | ~~0.20~~ | ~~0.9~~ | | | |
| ~~NO.9~~ | | ~~0.2~~ | | | | | |
| | ~~9.631~~ | | ~~0.20~~ | ~~1.9~~ | | | |
| ~~EC2~~ | | ~~0.2~~ | | | | | |
| | ~~10.369~~ | | ~~0.15~~ | ~~1.6~~ | | | |
| ~~NO.10~~ | | ~~0.1~~ | | | | | |
| | ~~2.480~~ | | ~~0.10~~ | ~~0.2~~ | | | |
| (NO.10+2.48) | | 0.1 | | | | | |
| | 17.520 | | 0.05 | 0.9 | | | |
| NO.11 | | 0.0 | | | | | |
| | 13.289 | | 0.15 | 2.0 | | | |
| BC3 | | 0.3 | | | | | |
| | 6.704 | | 0.25 | 1.7 | | | |
| SP3 | | 0.2 | | | | | |
| | 0.007 | | 0.20 | 0.0 | | | |
| NO.12 | | 0.2 | | | | | |
| | 6.696 | | 0.25 | 1.7 | | | |
| EC3 | | 0.3 | | | | | |
| | 3.647 | | 0.30 | 1.1 | | | |
| BC4 | | 0.3 | | | | | |
| | 8.318 | | 0.15 | 1.2 | | | |
| SP4 | | 0.0 | | | | | |
| | 1.339 | | 0.10 | 0.1 | | | |
| NO.13 | | 0.2 | | | | | |
| | 6.978 | | 0.25 | 1.7 | | | |
| EC4 | | 0.3 | | | | | |
| | 13.022 | | 0.30 | 3.9 | | | |
| NO.14 | | 0.3 | | | | | |
| | 12.572 | | 0.25 | 3.1 | | | |
| BC5 | | 0.2 | | | | | |
| | 4.881 | | 0.15 | 0.7 | | | |
| SP5 | | 0.1 | | | | | |
| | 2.547 | | 0.10 | 0.3 | | | |
| NO.15 | | 0.1 | | | | | |
| | 2.335 | | 0.05 | 0.1 | | | |
| EC5 | | 0.0 | | | | | |
| | 0.926 | | 0.00 | 0.0 | | | |
| EP | | 0.0 | | | | | |
| 合　計 | 100.781 | | | 18.5 | | | |

# 本線土工数量計算書



| 測　点 | 距　離 | 切土法面整形（CSL） | | | 盛土法面整形（BSL） | | |
|---|---|---|---|---|---|---|---|
| | | 長さ | 平均長さ | 面　積 | 長さ | 平均長さ | 面　積 |
| ~~NO.0~~ | | ~~0.0~~ | | | ~~0.0~~ | | |
| | ~~10.000~~ | | ~~0.00~~ | ~~0.0~~ | | ~~0.00~~ | ~~0.0~~ |
| ~~NO.0+10.00~~ | | ~~0.0~~ | | | ~~0.0~~ | | |
| | ~~10.000~~ | | ~~0.00~~ | ~~0.0~~ | | ~~0.10~~ | ~~1.0~~ |
| ~~NO.1~~ | | ~~0.0~~ | | | ~~0.2~~ | | |
| | ~~10.000~~ | | ~~0.00~~ | ~~0.0~~ | | ~~0.20~~ | ~~2.0~~ |
| ~~NO.1+10.00~~ | | ~~0.0~~ | | | ~~0.2~~ | | |
| | ~~10.000~~ | | ~~0.00~~ | ~~0.0~~ | | ~~0.10~~ | ~~1.0~~ |
| ~~NO.2~~ | | ~~0.0~~ | | | ~~0.0~~ | | |
| | ~~10.000~~ | | ~~0.00~~ | ~~0.0~~ | | ~~0.00~~ | ~~0.0~~ |
| ~~NO.2+10.00~~ | | ~~0.0~~ | | | ~~0.0~~ | | |
| | ~~11.390~~ | | ~~0.00~~ | ~~0.0~~ | | ~~0.00~~ | ~~0.0~~ |
| ~~(NO.3+1.39)~~ | | ~~0.0~~ | | | ~~0.0~~ | | |
| ~~NO.3+8.30~~ | | ~~0.0~~ | | | ~~0.0~~ | | |
| | ~~11.700~~ | | ~~0.00~~ | ~~0.0~~ | | ~~1.75~~ | ~~20.5~~ |
| ~~NO.4~~ | | ~~0.0~~ | | | ~~3.5~~ | | |
| | ~~20.000~~ | | ~~0.00~~ | ~~0.0~~ | | ~~2.90~~ | ~~58.0~~ |
| ~~NO.5~~ | | ~~0.0~~ | | | ~~2.3~~ | | |
| | ~~9.000~~ | | ~~0.00~~ | ~~0.0~~ | | ~~1.40~~ | ~~12.6~~ |
| ~~NO.5+9.00~~ | | ~~0.0~~ | | | ~~0.5~~ | | |
| | ~~11.000~~ | | ~~0.20~~ | ~~2.2~~ | | ~~0.30~~ | ~~3.3~~ |
| ~~NO.6~~ | | ~~0.4~~ | | | ~~0.1~~ | | |
| | ~~10.000~~ | | ~~0.20~~ | ~~2.0~~ | | ~~0.05~~ | ~~0.5~~ |
| ~~NO.6+10.00~~ | | ~~0.0~~ | | | ~~0.0~~ | | |
| | ~~10.000~~ | | ~~0.00~~ | ~~0.0~~ | | ~~0.00~~ | ~~0.0~~ |
| ~~NO.7~~ | | ~~0.0~~ | | | ~~0.0~~ | | |
| | ~~10.000~~ | | ~~0.00~~ | ~~0.0~~ | | ~~0.00~~ | ~~0.0~~ |
| ~~NO.7+10.00~~ | | ~~0.0~~ | | | ~~0.0~~ | | |
| | ~~10.000~~ | | ~~0.00~~ | ~~0.0~~ | | ~~0.00~~ | ~~0.0~~ |
| ~~NO.8~~ | | ~~0.0~~ | | | ~~0.0~~ | | |
| | ~~1.120~~ | | ~~0.00~~ | ~~0.0~~ | | ~~0.00~~ | ~~0.0~~ |
| ~~BC2~~ | | ~~0.0~~ | | | ~~0.0~~ | | |
| | ~~14.256~~ | | ~~0.00~~ | ~~0.0~~ | | ~~0.00~~ | ~~0.0~~ |
| ~~SP2~~ | | ~~0.0~~ | | | ~~0.0~~ | | |
| | ~~4.624~~ | | ~~0.30~~ | ~~1.4~~ | | ~~0.00~~ | ~~0.0~~ |
| ~~NO.9~~ | | ~~0.6~~ | | | ~~0.0~~ | | |
| | ~~9.631~~ | | ~~1.00~~ | ~~9.6~~ | | ~~0.00~~ | ~~0.0~~ |
| ~~EC2~~ | | ~~1.4~~ | | | ~~0.0~~ | | |
| | ~~10.369~~ | | ~~0.70~~ | ~~7.3~~ | | ~~0.00~~ | ~~0.0~~ |
| ~~NO.10~~ | | ~~0.0~~ | | | ~~0.0~~ | | |
| | ~~2.480~~ | | ~~0.00~~ | ~~0.0~~ | | ~~0.00~~ | ~~0.0~~ |
| (NO.10+2.48) | | 0.0 | | | 0.0 | | |
| | 17.520 | | 0.00 | 0.0 | | 0.00 | 0.0 |
| NO.11 | | 0.0 | | | 0.0 | | |
| | 13.289 | | 0.15 | 2.0 | | 0.55 | 7.3 |
| BC3 | | 0.3 | | | 1.1 | | |
| | 6.704 | | 0.25 | 1.7 | | 1.20 | 8.0 |
| SP3 | | 0.2 | | | 1.3 | | |
| | 0.007 | | 0.20 | 0.0 | | 1.30 | 0.0 |
| NO.12 | | 0.2 | | | 1.3 | | |
| | 6.696 | | 0.15 | 1.0 | | 1.40 | 9.4 |
| EC3 | | 0.1 | | | 1.5 | | |
| | 3.647 | | 0.05 | 0.2 | | 1.55 | 5.7 |
| BC4 | | 0.0 | | | 1.6 | | |
| | 8.318 | | 0.00 | 0.0 | | 0.80 | 6.7 |
| SP4 | | 0.0 | | | 0.0 | | |
| | 1.339 | | 0.00 | 0.0 | | 0.00 | 0.0 |
| NO.13 | | 0.0 | | | 0.0 | | |
| | 6.978 | | 0.00 | 0.0 | | 0.65 | 4.5 |
| EC4 | | 0.0 | | | 1.3 | | |
| | 13.022 | | 0.00 | 0.0 | | 1.30 | 16.9 |
| NO.14 | | 0.0 | | | 1.3 | | |
| | 12.572 | | 0.00 | 0.0 | | 1.60 | 20.1 |
| BC5 | | 0.0 | | | 1.9 | | |
| | 4.881 | | 0.00 | 0.0 | | 2.70 | 13.2 |
| SP5 | | 0.0 | | | 3.5 | | |
| | 2.547 | | 0.00 | 0.0 | | 3.85 | 9.8 |
| NO.15 | | 0.0 | | | 4.2 | | |
| | 2.335 | | 0.00 | 0.0 | | 2.10 | 4.9 |
| EC5 | | 0.0 | | | 0.0 | | |
| | 0.926 | | 0.00 | 0.0 | | 0.00 | 0.0 |
| EP | | 0.0 | | | 0.0 | | |
| 合　計 | 100.781 | | | 4.9 | | | 106.5 |

# 数量調書

工種　　舗装工

1工区

| 種　別 | 細　別 | 規　格 | 単　位 | 数　量 | 備　考 |
|---|---|---|---|---|---|
| AS舗装工 | | | | | |
| | 表層 | ⑨密粒度As(13F)<br>t=4cm | m2 | 305.9 | |
| | 下層路盤 | ARC-40　　t=16cm | m2 | 305.9 | |
| CO舗装工 | | | | | |
| | 表層 | コンクリート<br>18-8-25　t=10cm | m2 | 39.6 | |
| | 路盤 | RC-40　　t=10cm | m2 | 39.6 | |
| | | | | | |
| | | | | | |
| | | | | | |
| | | | | | |
| | | | | | |
| | | | | | |
| | | | | | |
| | | | | | |
| | | | | | |
| | | | | | |
| | | | | | |
| | | | | | |
| | | | | | |
| | | | | | |
| | | | | | |

# 数量計算書

舗装工　　1式当り　　(1/3)

## 本線AS舗装工

略　図

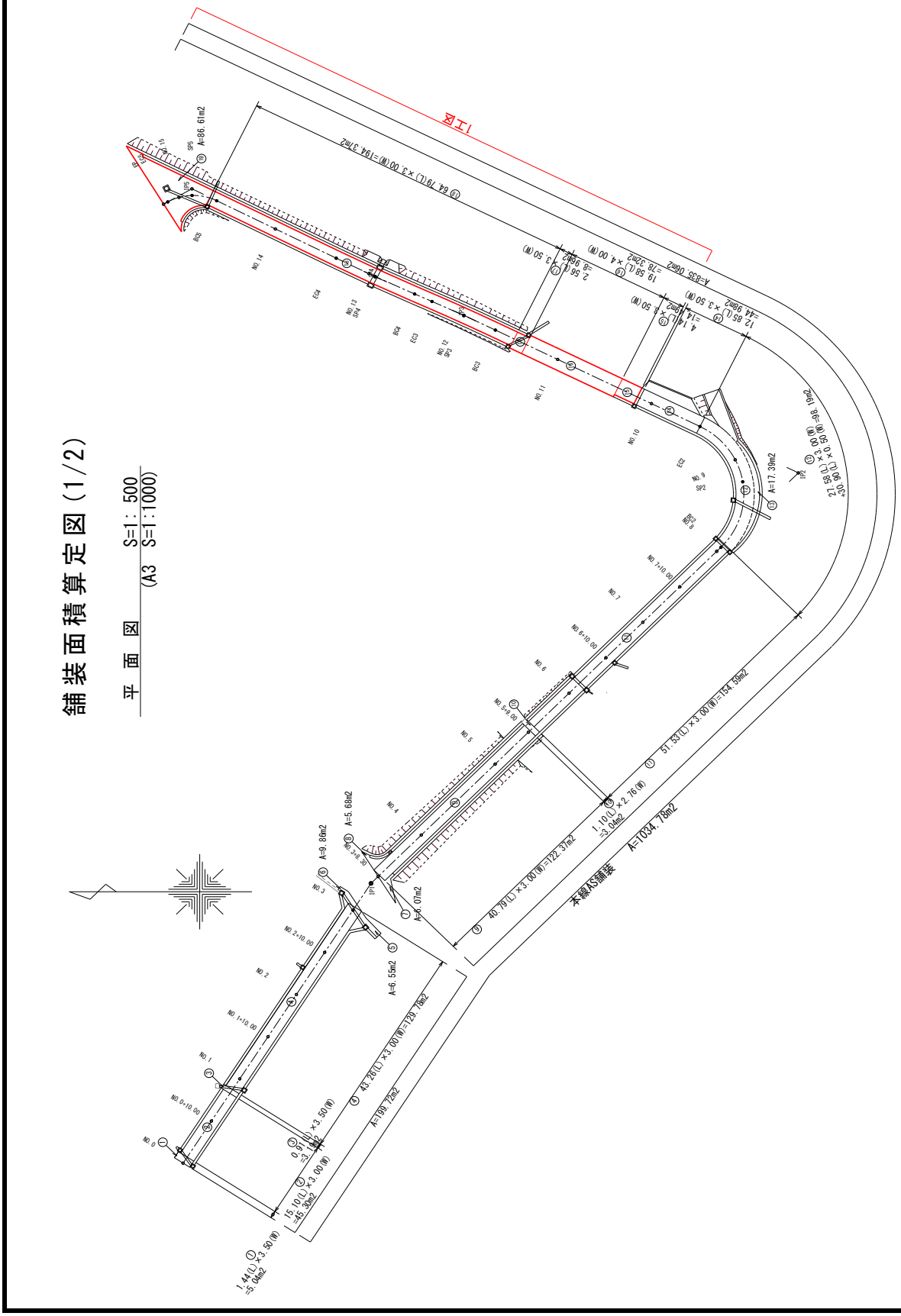

# 数量計算書

舗装工　　1式当り　　(2/3)

## AS舗装工　CO舗装工

略　図

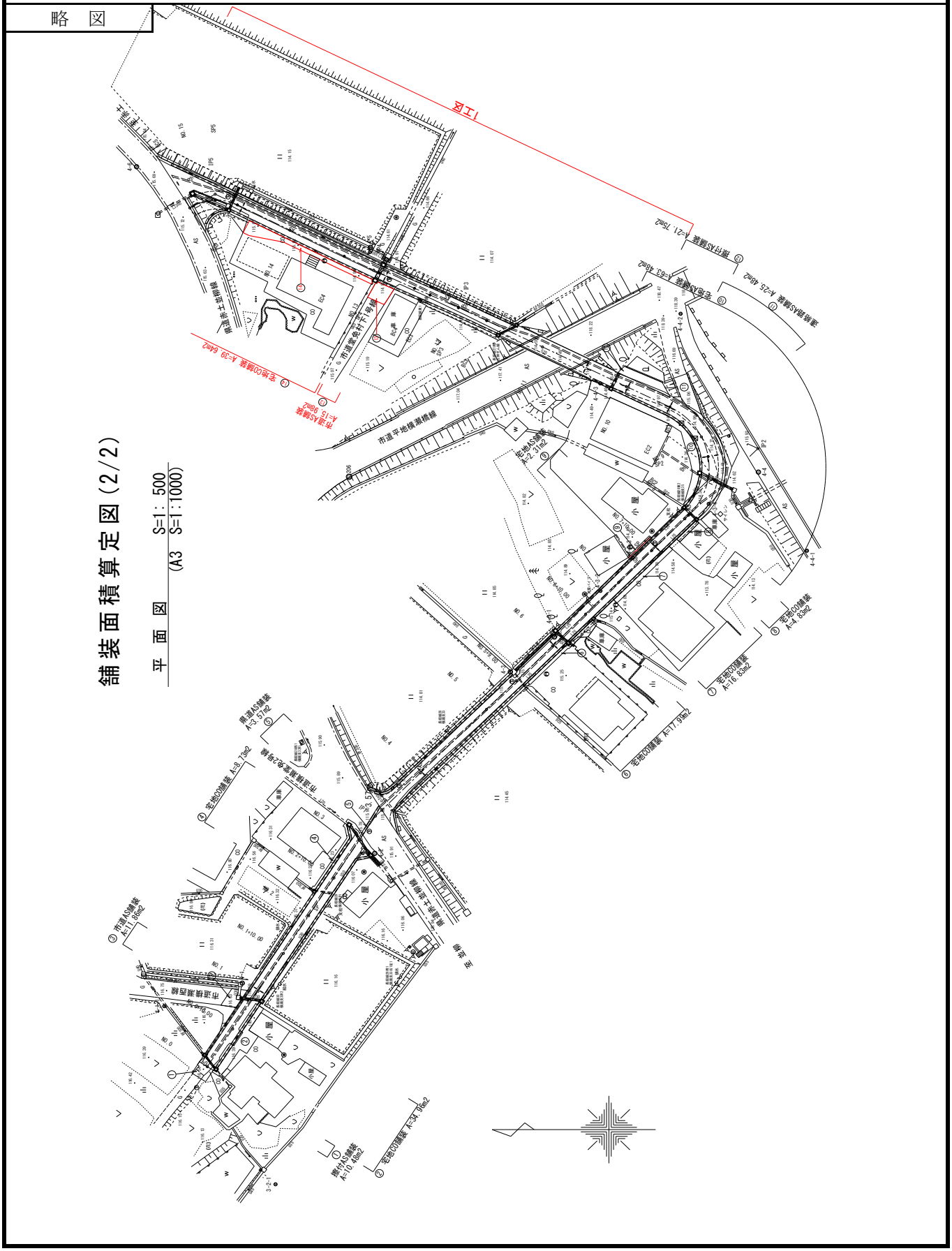

# 舗装工



| 呼び名/名称 | 規　格 | 計　算　式 | 単位 | 数　量 |
|---|---|---|---|---|
| 表層 | ⑨密粒度<br>As(13F) t=4cm | 舗装面積算定図(1/2)より<br>⑰A= 8.96<br>⑱A= 194.37<br>⑲A= 86.61<br>舗装面積算定図(2/2)より<br>⑬A= 15.98<br>合　計 305.92 | m2 | 305.9 |
| 下層路盤 | ARC-40<br>t=16cm | 舗装面積算定図(1/2)より<br>⑰A= 8.96<br>⑱A= 194.37<br>⑲A= 86.61<br>舗装面積算定図(2/2)より<br>⑬A= 15.98<br>合　計 305.92 | m2 | 305.9 |
| 表層 | コンクリート<br>18-8-25<br>t=10cm | 舗装面積算定図(2/2)より<br>⑭A= 39.64<br>合　計 39.64 | m2 | 39.6 |
| 路盤 | RC-40<br>t=10cm | 舗装面積算定図(2/2)より<br>⑭A= 39.64<br>合　計 39.64 | m2 | 39.6 |

# 数量調書

工種　　排水構造物工

1工区　　(1/2)

| 種　別 | 細　別 | 規　格 | 単　位 | 数　量 | 備　考 |
|---|---|---|---|---|---|
| 作業土工 | | | | | |
| | 床掘 | | m3 | 21.9 | |
| | 埋戻 | 転用土 | m3 | 11.9 | |
| | 基面整正 | | m2 | 113.2 | |
| | 残土処理 | | m3 | 10.0 | 24.2-13.2=11.0 |
| 側溝工 | | | | | |
| | 自由勾配側溝 | FU-B300-C300 | m | 138.5 | |
| | | ~~FU-B300-C400~~ | ~~m~~ | ~~86.5~~ | |
| | | ~~FU-B300-C500~~ | ~~m~~ | ~~45.6~~ | |
| | | ~~FU-B300-C600~~ | ~~m~~ | ~~10.0~~ | |
| | | ~~FU-B300-C700~~ | ~~m~~ | ~~2.5~~ | |
| | 蓋版 | 車道用 300用(L=500) | 枚 | 28 | Gr |
| | 蓋版 | 車道用 300用(L=500) | 枚 | 111 | Co |
| | 自由勾配側溝<br>調整コンクリート | 18-8-25 | m3 | 2.3 | 自由勾配側溝に<br>含まれている |
| | 横断自由勾配側溝 | 横断FU-B300-C300 | m | 7.5 | |
| | 蓋版 | グレーチング蓋版<br>300用 | 枚 | 4 | |
| | 横断自由勾配側溝<br>調整コンクリート | 18-8-25 | m3 | 0.06 | 自由勾配側溝に<br>含まれている |
| | L型側溝 | PL2-B250B | m | 5.4 | |
| | ~~ベンチフリューム~~ | ~~BF-I-300~~ | ~~m~~ | ~~4.0~~ | |
| | | BF-I-350 | m | 4.3 | 既設付設替 |
| | | | | | |

# 数量調書

工種　　排水構造物工

(2/2)

| 種　別 | 細　別 | 規　格 | 単　位 | 数　量 | 備　考 |
|---|---|---|---|---|---|
| 管渠工 | | | | | |
| | 横断暗渠 | CSB-I-250 | m | 4.2 | |
| | | CSB-I-300 | m | 13.4 | |
| | | ~~CSB-I-350~~ | ~~m~~ | ~~11.0~~ | |
| | | CSB-I-600 | m | 4.8 | |
| | ~~排水取水管~~ | ~~VP150~~ | ~~m~~ | ~~1.8~~ | |
| 集水桝工 | | | | | |
| | 集水桝 | M1-B500×L500×H600 | 基 | 2 | |
| | | M1-B500×L500×H1000 | 基 | 1 | |
| | | ~~M1-B600×L600×H600~~ | ~~基~~ | ~~4~~ | |
| | | ~~M1-B600×L600×H700~~ | ~~基~~ | ~~1~~ | |
| | | ~~M1-B600×L600×H800~~ | ~~基~~ | ~~1~~ | |
| | | M1-B600×L900×H1000 | 基 | 2 | |
| | | M1-B700×L700×H1200 | 基 | 1 | |
| | | ~~M1-B300×L400×H500~~ | ~~基~~ | ~~1~~ | |
| | 蓋版 | SG3-B500×500 | 枚 | 3 | |
| | | ~~SG3-B600×600~~ | ~~枚~~ | ~~6~~ | |
| | | SG3-B600×900 | 枚 | 2 | |
| | | SG3-B700×700 | 枚 | 1 | |
| | | ~~SG3-B300×400~~ | ~~枚~~ | ~~1~~ | |
| | | | | | |

# 数量計算書

作業土工　　1式当り　　(1/3)

## 側溝工 管渠工

略　図

FU-B300-(C)　　S=1:20
(A3 S=1:40)

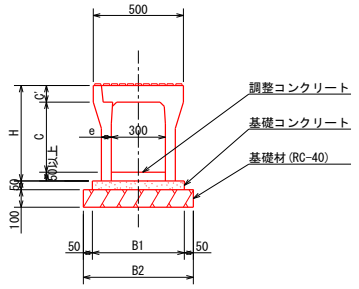


寸法表及び数量表　(10m当り)

| 呼び名 (巾×深) | 寸法 (mm) H | C | c' | e | B1 | B2 |
|---|---|---|---|---|---|---|
| 300 X 300 | 445 | 300 | 95 | 50 | 500 | 600 |
| X 400 | 545 | 400 | | 55 | 510 | 610 |
| X 500 | 645 | 500 | | | | |
| X 600 | 745 | 600 | | 65 | 530 | 630 |
| X 700 | 845 | 700 | | | | |

BF-I-(B)　　S=1:20
(A3 S=1:40)

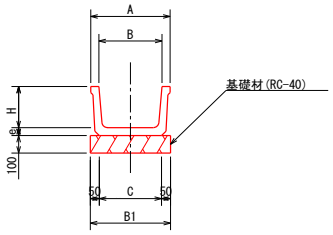


寸法表及び数量表　(10m当り)

| 呼び名 | 寸法 (mm) A | B | C | H | e | B1 |
|---|---|---|---|---|---|---|
| 300 | 380 | 300 | 300 | 200 | 40 | 400 |
| 350 | 440 | 350 | 345 | 235 | 45 | 445 |

横断FU-B300-C300　　S=1:20
(A3 S=1:40)

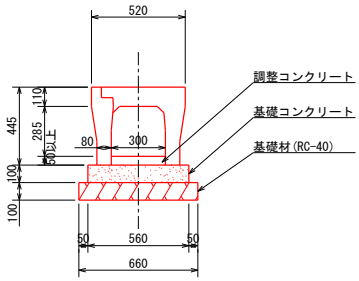


PL2-B250B　　S=1:20
(A3 S=1:40)

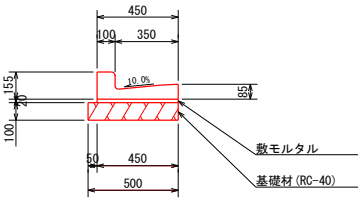


横断暗渠
CSB-I-(D)　　S=1:20
(A3 S=1:40)

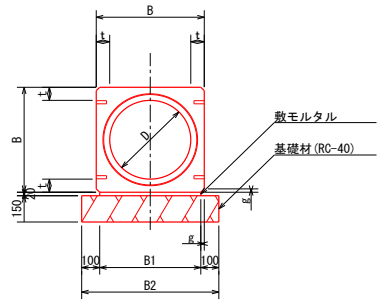


寸法表及び数量表

| 呼び径 | 寸法 (mm) D 内径 | B | t 厚さ | g | B1 | B2 |
|---|---|---|---|---|---|---|
| 250 | 250 | 362 | 56 | 30 | 302 | 502 |
| 300 | 300 | 420 | 60 | 30 | 360 | 560 |
| 350 | 350 | 478 | 64 | 30 | 418 | 618 |
| 600 | 600 | 786 | 93 | 30 | 726 | 926 |

# 数量計算書

作業土工　　1式当り　　(2/3)

## 集水桝工

略　図

M1-B500×L500×H600

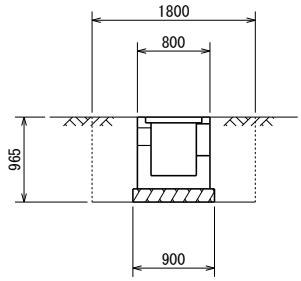


作業土工
(L=1.30m)　(1基当り)

| | | |
|---|---|---|
| 床掘 | m2 | 1.7 |
| 埋戻 | m2 | 1.0 |
| 基面整正 | m2 | 0.8 |

M1-B500×L500×H1000

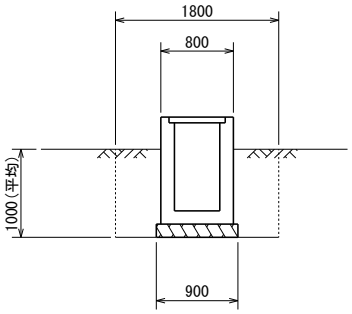


作業土工
(L=1.80m)　(1基当り)

| | | |
|---|---|---|
| 床掘 | m2 | 1.8 |
| 埋戻 | m2 | 1.0 |
| 基面整正 | m2 | 0.8 |

M1-B600×L600×H600

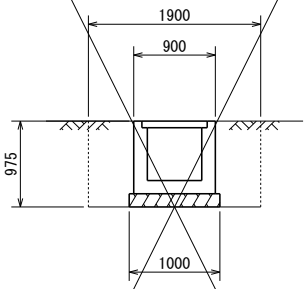


作業土工
(L=1.40m)　(1基当り)

| | | |
|---|---|---|
| 床掘 | m2 | 1.9 |
| 埋戻 | m2 | 1.0 |
| 基面整正 | m2 | 1.0 |

M1-B600×L600×H700

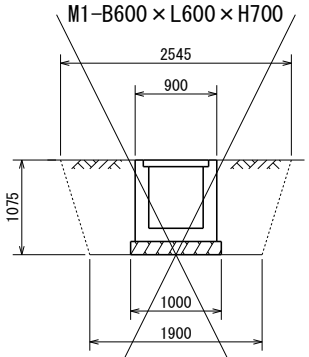


作業土工
(L=1.40m)　(1基当り)

| | | |
|---|---|---|
| 床掘 | m2 | 2.4 |
| 埋戻 | m2 | 1.4 |
| 基面整正 | m2 | 1.0 |

M1-B600×L600×H800

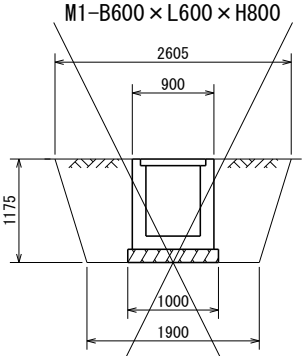


作業土工
(L=1.00m)　(1基当り)

| | | |
|---|---|---|
| 床掘 | m2 | 2.6 |
| 埋戻 | m2 | 1.6 |
| 基面整正 | m2 | 1.0 |

M1-B600×L900×H1000

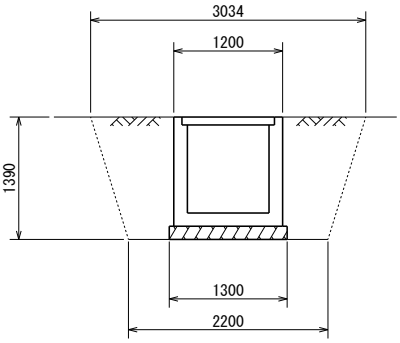


作業土工
(L=1.40m)　(1基当り)

| | | |
|---|---|---|
| 床掘 | m2 | 3.6 |
| 埋戻 | m2 | 2.0 |
| 基面整正 | m2 | 1.3 |

M1-B700×L700×H1200

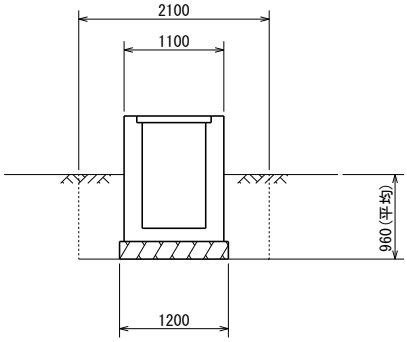


作業土工
(L=2.10m)　(1基当り)

| | | |
|---|---|---|
| 床掘 | m2 | 2.0 |
| 埋戻 | m2 | 0.9 |
| 基面整正 | m2 | 1.4 |

# 作業土工



| 細別 | 規格 | 計　算　式 | | 単位 | 数　量 |
|---|---|---|---|---|---|
| 側溝工 | | | | | |
| 基面整正 | FU-B300-C300 | A=0.60×142.5= 85.5 | 83.10 | | |
| | ~~FU-B300-C400~~ | ~~A=0.61× 86.5= 52.77~~ | ~~52.77~~ | | |
| | ~~FU-B300-C500~~ | ~~A=0.61× 45.6= 27.82~~ | ~~27.82~~ | | |
| | ~~FU-B300-C600~~ | ~~A=0.63× 10.0= 6.30~~ | ~~6.30~~ | | |
| | ~~FU-B300-C700~~ | ~~A=0.63× 2.5= 1.58~~ | ~~1.58~~ | | |
| | 横断FU-B300-C300 | A=0.66× 7.5= 4.95 | 4.95 | | |
| | PL2-B250B | A=0.50× 5.4= 2.70 | 2.70 | | |
| | ~~BF-I-300~~ | ~~A=0.40× 4.0= 1.60~~ | ~~1.60~~ | | |
| | BF-I-350 | A=0.45× 4.3= 1.94 | 1.94 | | |
| | | 合　計 | 92.69 | m2 | 92.7 |
| 管渠工 | | | | | |
| 基面整正 | CSB-I-250 | A=0.50× 4.20= 2.10 | 2.10 | | |
| | CSB-I-300 | A=0.56×13.4= 7.50 | 7.50 | | |
| | ~~CSB-I-350~~ | ~~A=0.62×11.0= 6.82~~ | ~~6.82~~ | | |
| | CSB-I-600 | A=0.93×4.80= 4.46 | 4.46 | | |
| | | 合　計 | 14.06 | m2 | 14.1 |
| 集水桝工 | | | | | |
| 床掘 | M1-B500×L500×H600 | V=1.7×1.30×③= 6.63 | 4.42 | | |
| | M1-B500×L500×H1000 | V=1.8×1.80×①= 3.24 | 3.24 | | |
| | ~~M1-B600×L600×H600~~ | ~~V=1.9×1.40×④= 10.64~~ | ~~10.64~~ | | |
| | ~~M1-B600×L600×H700~~ | ~~V=2.4×1.40×①= 3.36~~ | ~~3.36~~ | | |
| | ~~M1-B600×L600×H800~~ | ~~V=2.6×1.00×①= 2.60~~ | ~~2.60~~ | | |
| | M1-B600×L900×H1000 | V=3.6×1.40×②= 10.08 | 10.08 | | |
| | M1-B700×L700×H1200 | V=2.0×2.10×①= 4.20 | 4.20 | | |
| | | 合　計 | 21.94 | m3 | 21.9 |
| 埋戻 | M1-B500×L500×H600 | V=1.0×1.30×③= 3.90 | 2.60 | | |
| (転用土) | M1-B500×L500×H1000 | V=1.0×1.80×①= 1.80 | 1.80 | | |
| | ~~M1-B600×L600×H600~~ | ~~V=1.0×1.40×④= 5.60~~ | ~~5.60~~ | | |
| | ~~M1-B600×L600×H700~~ | ~~V=1.4×1.40×①= 1.96~~ | ~~1.96~~ | | |
| | ~~M1-B600×L600×H800~~ | ~~V=1.6×1.00×①= 1.60~~ | ~~1.60~~ | | |
| | M1-B600×L900×H1000 | V=2.0×1.40×②= 5.60 | 5.60 | | |
| | M1-B700×L700×H1200 | V=0.9×2.10×①= 1.89 | 1.89 | | |
| | | 合　計 | 11.89 | m3 | 11.9 |
| 基面整正 | M1-B500×L500×H600 | A=0.8×③= 2.40 | 1.60 | | |
| | M1-B500×L500×H1000 | A=0.8×①= 0.80 | 0.80 | | |
| | ~~M1-B600×L600×H600~~ | ~~A=1.0×④= 4.00~~ | ~~4.00~~ | | |
| | ~~M1-B600×L600×H700~~ | ~~A=1.0×①= 1.00~~ | ~~1.00~~ | | |
| | ~~M1-B600×L600×H800~~ | ~~A=1.0×①= 1.00~~ | ~~1.00~~ | | |
| | M1-B600×L900×H1000 | A=1.3×②= 2.60 | 2.60 | | |
| | M1-B700×L700×H1200 | A=1.4×①= 1.40 | 1.40 | | |
| | ~~M1-B300×L400×H500~~ | ~~A=0.6×①= 0.60~~ | ~~0.60~~ | | |
| | | 合　計 | 6.40 | m2 | 6.4 |

# 側溝工　延長調書



| 呼び名・名称 | 規格・寸法 | 測　点・計 算 式 | 単位 | 数　量 |
|---|---|---|---|---|
| 自由勾配側溝 | FU-B300-C300 | ~~NO.　0+ 2.24～NO.　0+14.54（左側）　L=　12.30~~ | | |
| | | ~~NO.　0+19.45～NO.　2+ 4.80（左側）　L=　25.35~~ | | |
| | | ~~NO.　2+ 5.60～NO .3+ 1.24（左側）　L=　16.42~~ | | |
| | | ~~NO.　3+13.72～NO.　5+ 9.42（左側）　L=　35.70~~ | | |
| | | ~~NO.　6+ 3.25～NO.　8+ 1.27（左側）　L=　38.00~~ | | |
| | | ~~NO.10+ 3.14～NO.10+ 7.14（左側）　L=　4.00~~ | | |
| | | NO.11+10.08～NO.12+14.12（左側）　L=　24.00 | | |
| | | NO.12+19.30～NO.14+13.38（左側）　L=　34.00 | | |
| | | ~~NO.　3+10.74～NO.　6+ 2.35（右側）　L=　51.61~~ | | |
| | | NO.11+ 7.52～NO.12+18.00（右側）　L=　30.50 | | |
| | | NO.12+19.20～NO.15+ 2.23（右側）　L=　50.00 | | |
| | | 合 計　L= 138.50 | m | 138.5 |
| | | | | |
| | ~~FU-B300-C400~~ | ~~NO.　5+18.35～NO.　6+ 2.35（左側）　L=　4.00~~ | | |
| | | ~~NO.　9+18.07～NO.10+ 2.34（左側）　L=　4.27~~ | | |
| | | ~~NO.　0+ 0.89～NO.　0+18.09（右側）　L=　17.21~~ | | |
| | | ~~NO.　1+15.00～NO.　2+18.00（右側）　L=　23.83~~ | | |
| | | ~~NO.　6+ 3.25～NO.　6+10.05（右側）　L=　6.80~~ | | |
| | | ~~NO.　6+10.85～NO.　8+ 1.24（右側）　L=　30.40~~ | | |
| | | ~~合 計　L=　86.51~~ | ~~m~~ | ~~86.5~~ |
| | | | | |
| | ~~FU-B300-C500~~ | ~~NO.　5+10.52～NO.　5+18.35（左側）　L=　7.83~~ | | |
| | | ~~NO.　8+ 2.18～NO.　8+11.00（左側）　L=　7.79~~ | | |
| | | ~~NO.　8+12.02～NO.　9+ 1.06（左側）　L=　8.00~~ | | |
| | | ~~NO.　9+12.07～NO.　9+18.07（左側）　L=　6.00~~ | | |
| | | ~~NO.　0+18.99～NO.　1+14.99（右側）　L=　16.00~~ | | |
| | | ~~合 計　L=　45.62~~ | ~~m~~ | ~~45.6~~ |
| | | | | |
| | ~~FU-B300-C600~~ | ~~NO.　9+ 1.06～NO.　9+12.07（左側）　L=　10.00~~ | | |
| | | ~~合 計　L=　10.00~~ | ~~m~~ | ~~10.0~~ |
| | | | | |
| | | | | |

# 側溝工　延長調書



| 呼び名・名称 | 規格・寸法 | 測　点・計 算 式 | | 単位 | 数　量 |
|---|---|---|---|---|---|
| ~~自由勾配側溝~~ | ~~FU-B300-C700~~ | ~~NO.　2+18.32（右側）~~ | ~~L=　2.47~~ | | |
| | | ~~合 計~~ | ~~L=　2.47~~ | ~~m~~ | ~~2.5~~ |
| | | | | | |
| | | | | | |
| 蓋版 | 車道用 300用(L=500) | N=138.5/10×② | N=　28.00 | | Gr |
| | | N=138.5/2.00×②-27.7 | N=　110.80 | 枚 | Co |
| | | 合 計 | N=　28.00 | 枚 | 28.0 |
| | | | | | |
| 横断自由勾配側溝 | 横断FU-B300-C300 | ~~NO.0+14.54～NO.0+15.54（左側）~~ | ~~L=　2.00~~ | | |
| | | ~~NO.0+17.45～NO.0+19.45（左側）~~ | ~~L=　2.00~~ | | |
| | | NO.10+ 2.74 | L=　3.50 | | |
| | | NO.12+14.12～NO.12+18.10（左側） | L=　4.00 | | |
| | | 合 計 | L=　7.50 | m | 7.5 |
| | | | | | |
| | | | | | |
| 蓋版 | グレーチング蓋版300用 | N=7.50/2.00×① | N=　3.75 | 枚 | |
| | | 合 計 | N=　3.75 | 枚 | 4.0 |
| | | | | | |
| | | | | | |
| L型側溝 | PL2-B250B | ~~NO.　3+ 9.85～NO.　3+13.02（左側）~~ | ~~L=　3.60~~ | | |
| | | NO.14+14.37～NO.15+ 1.87（左側） | L=　5.40 | | |
| | | 合 計 | L=　5.40 | m | 5.4 |
| | | | | | |
| | | | | | |
| ~~ベンチフリューム~~ | ~~BF-I-300~~ | ~~NO.　0+ 1.84（左側）~~ | ~~L=　0.62~~ | | |
| | | ~~NO.　2+ 5.20（左側）~~ | ~~L=　0.98~~ | | |
| | | ~~NO.　6+10.45（右側）~~ | ~~L=　2.38~~ | | |
| | | ~~合 計~~ | ~~L=　3.98~~ | ~~m~~ | ~~4.0~~ |
| | | | | | |
| | BF-I-350 | NO.11+ 7.12（右側） | L=　4.25 | | |
| | | 合 計 | L=　4.25 | m | 4.3 |
| | | | | | |

# 数量計算書

側溝工　　10m当り　　(1/9)

## 自由勾配側溝 FU-B300-C300

略　図

FU-B300-(C)　　S=1:20
(A3 S=1:40)

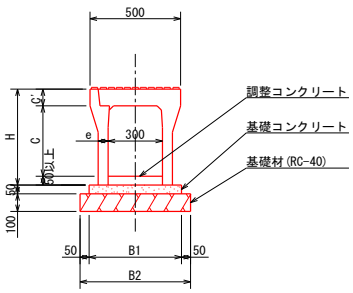


寸法表及び数量表　　(10m当り)

| 呼び名 (巾×深) | 寸法 (mm) H | C | c' | e | B1 | B2 | 参考質量 (kg) | 基礎材(RC-40) (m3) | t=100 (m2) | 基礎コンクリート (m3) | 型枠 (m2) | 調整コンクリート (m3) |
|---|---|---|---|---|---|---|---|---|---|---|---|---|
| 300 X 300 | 445 | 300 | | 50 | 500 | 600 | 326 | 0.60 | 6.0 | 0.25 | 1.0 | 展開図参照 |
| X 400 | 545 | 400 | 95 | 55 | 510 | 610 | 403 | 0.61 | 6.1 | 0.26 | | |
| X 500 | 645 | 500 | | | | | 455 | | | | | |
| X 600 | 745 | 600 | | 65 | 530 | 630 | 560 | 0.63 | 6.3 | 0.27 | | |
| X 700 | 845 | 700 | | | | | 625 | | | | | |

| 呼び名/名称 | 規　格 | 計　算　式 | | 単位 | 数　量 |
|---|---|---|---|---|---|
| 自由勾配側溝 | FU-B300-C300 | N=10.00/2.00=5.00 | 5.00 | 個 | 5.0 |
| コンクリート蓋版 | 車道用 300用 | | | 枚 | 10.0 |
| 基礎コンクリート | 18-8-40 | V=0.50×0.05×10.00=0.25 | 0.25 | m3 | 0.25 |
| 型枠 | 無筋 | A=0.05×10.00×②=1.00 | 1.00 | m2 | 1.00 |
| 基礎材 | RC-40　t=10cm | A=0.60×10.00=6.00 | 6.00 | m2 | 6.00 |
| | | | | | |
| | | | | | |
| | | | | | |
| | | | | | |
| | | | | | |
| | | | | | |
| | | | | | |
| | | | | | |

# 数量計算書

側溝工　　10m当り　　(6/9)

## 横断自由勾配側溝　横断FU-B300-C300

略　図

横断FU-B300-C300　　S=1:20
(A3 S=1:40)

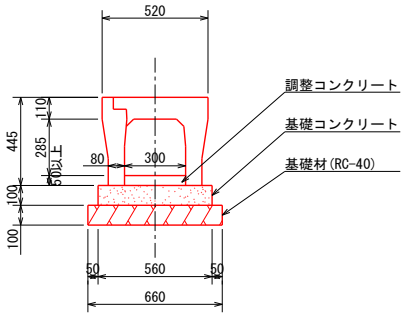


数量表　(10m当り)

| 呼び名 (巾×深) | 参考質量 (kg) | 基礎材(RC-40) (m3) | 基礎材(RC-40) t=100(m2) | 基礎コンクリート (m3) | 型枠 (m2) | 調整コンクリート (m3) |
|---|---|---|---|---|---|---|
| 300 X 300 | 475 | 0.66 | 6.6 | 0.56 | 2.0 | 展開図参照 |

| 呼び名/名称 | 規　格 | 計　算　式 | | 単位 | 数　量 |
|---|---|---|---|---|---|
| 横断自由勾配側溝 | 横断FU-B300-C300 | N=10.00/2.00=5.00 | 5.00 | 個 | 5.0 |
| グレーチング蓋版 | 300用 | | | 枚 | 5.0 |
| 基礎コンクリート | 18-8-40 | V=0.56×0.10×10.00=0.56 | 0.56 | m3 | 0.56 |
| 型枠 | 無筋 | A=0.10×10.00×②=2.00 | 2.00 | m2 | 2.00 |
| 基礎材 | RC-40　t=10cm | A=0.66×10.00=6.60 | 6.60 | m2 | 6.60 |
| | | | | | |
| | | | | | |
| | | | | | |
| | | | | | |
| | | | | | |
| | | | | | |
| | | | | | |
| | | | | | |

# 数量計算書

側溝工　　10m当り　　(7/9)

## L型側溝 PL2-B250B

略　図

PL2-B250B　　S=1:20
(A3 S=1:40)

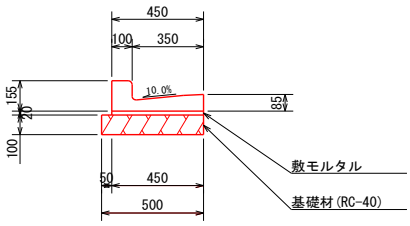


数量表　(10m当り)

| 呼び名 | 参考質量 | 基礎材(RC-40) | | 敷モルタル |
|---|---|---|---|---|
| | (kg) | (m3) | t=100(m2) | (m3) |
| 250B | 61 | 0.50 | 5.0 | 0.09 |

| 呼び名/名称 | 規　格 | 計　算　式 | | 単位 | 数　量 |
|---|---|---|---|---|---|
| L型側溝 | PL2-B250B | N=10.00/0.60=16.67 | 16.67 | 個 | 16.7 |
| 敷モルタル | 1:3　　t= 2cm | V=0.45×0.02×10.00=0.09 | 0.09 | m3 | 0.09 |
| 基礎材 | RC-40　t=10cm | A=0.50×10.00=5.00 | 5.00 | m2 | 5.00 |
| | | | | | |
| | | | | | |
| | | | | | |
| | | | | | |
| | | | | | |
| | | | | | |
| | | | | | |
| | | | | | |
| | | | | | |
| | | | | | |

# 数量計算書

側溝工　　10m当り　　(8/9)

## ベンチフリューム BF-I-300

略　図

BF-I-(B)　　S=1:20
(A3 S=1:40)

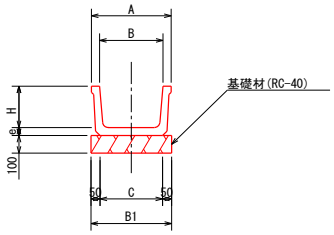


寸法表及び数量表　　(10m当り)

| 呼び名 | 寸法 (mm) A | B | C | H | e | B1 | 参考質量 (kg) | 基礎材(RC-40) (m3) | t=100 (m2) |
|---|---|---|---|---|---|---|---|---|---|
| 300 | 380 | 300 | 300 | 200 | 40 | 400 | 139 | 0.40 | 4.0 |
| 350 | 440 | 350 | 345 | 235 | 45 | 445 | 183 | 0.45 | 4.5 |

| 呼び名/名称 | 規　格 | 計　算　式 | | 単位 | 数　量 |
|---|---|---|---|---|---|
| ベンチフリューム | BF-I-300 | N=10.00/2.00=5.00 | 5.00 | 個 | 5.0 |
| 基礎材 | RC-40　t=10cm | A=0.40×10.00=4.00 | 4.00 | m2 | 4.00 |

# 数量計算書

側溝工　　10m当り　　(9/9)

## ベンチフリューム BF-I-350

略　図

BF-I-(B)　　S=1:20
(A3 S=1:40)

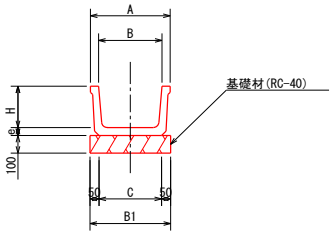


寸法表及び数量表　　(10m当り)

| 呼び名 | 寸法 (mm) A | B | C | H | e | B1 | 参考質量 (kg) | 基礎材(RC-40) (m3) | t=100 (m2) |
|---|---|---|---|---|---|---|---|---|---|
| 300 | 380 | 300 | 300 | 200 | 40 | 400 | 139 | 0.40 | 4.0 |
| 350 | 440 | 350 | 345 | 235 | 45 | 445 | 183 | 0.45 | 4.5 |

| 呼び名/名称 | 規　格 | 計　算　式 | | 単位 | 数　量 |
|---|---|---|---|---|---|
| ベンチフリューム | BF-I-350 | N=10.00/2.00=5.00 | 5.00 | 個 | 5.0 |
| 基礎材 | RC-40　t=10cm | A=0.45×10.00=4.50 | 4.50 | m2 | 4.50 |
| | | | | | |
| | | | | | |
| | | | | | |
| | | | | | |
| | | | | | |
| | | | | | |
| | | | | | |
| | | | | | |
| | | | | | |
| | | | | | |
| | | | | | |

# 数量計算書

側溝工　　1式当り　　(3/4)

## 自由勾配側溝　調整コンクリート

略　図

FU-B300-(C)　　S=1:20
(A3 S=1:40)

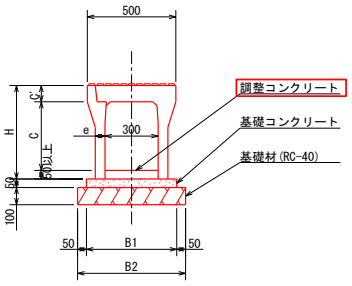


寸法表及び数量表　　(10m当り)

| 呼び名 (巾×深) | 寸法 (mm) H | C | c' | e | B1 | B2 | 参考質量 (kg) | 基礎材(RC-40) (m3) | t=100(m2) | 基礎コンクリート (m3) | 型枠 (m2) | 調整コンクリート (m3) |
|---|---|---|---|---|---|---|---|---|---|---|---|---|
| 300 X 300 | 445 | 300 | 95 | 50 | 500 | 600 | 326 | 0.60 | 6.0 | 0.25 | 1.0 | 展開図参照 |
| X 400 | 545 | 400 | | 55 | 510 | 610 | 403 | 0.61 | 6.1 | 0.26 | | |
| X 500 | 645 | 500 | | | | | 455 | | | | | |
| X 600 | 745 | 600 | | 65 | 530 | 630 | 560 | 0.63 | 6.3 | 0.27 | | |
| X 700 | 845 | 700 | | | | | 625 | | | | | |

| 呼び名/名称 | 規　格 | 計　算　式 | 単位 | 数　量 |
|---|---|---|---|---|
| 調整コンクリート | 18-8-25 | 排水構造物展開図(3/4)より | | |
| | | ~~V=(0.169+0.140)/2× 4.00×0.30=0.19　0.19~~ | | |
| | | ~~V=(0.140+0.062)/2× 3.79×0.30=0.11　0.11~~ | | |
| | | ~~V=(0.152+0.050)/2× 8.00×0.30=0.24　0.24~~ | | |
| | | ~~V=(0.150+0.133)/2× 6.00×0.30=0.25　0.25~~ | | |
| | | ~~V=(0.133+0.165)/2× 4.00×0.30=0.18　0.18~~ | | |
| | | ~~V=(0.065+0.173)/2× 6.00×0.30=0.21　0.21~~ | | |
| | | ~~V=(0.073+0.188)/2× 4.27×0.30=0.17　0.17~~ | | |
| | | V=(0.088+0.093)/2× 4.00×0.30=0.11　0.11 | | |
| | | 排水構造物展開図(4/4)より | | |
| | | V=(0.079+0.050)/2×10.00×0.30=0.19　0.19 | | |
| | | V=0.050×14.00×0.30=0.21　0.21 | | |
| | | V=0.050×34.00×0.30=0.51　0.51 | | |
| | | V=(0.088+0.050)/2×12.50×0.30=0.26　0.26 | | |
| | | V=0.050×18.00×0.30=0.27　0.27 | | |
| | | V=0.050×50.00×0.30=0.75　0.75 | | |
| | | 計　2.30 | m3 | 2.3 |

# 数量計算書

側溝工　　1式当り　　(4/4)

## 横断自由勾配側溝　調整コンクリート

略　図

横断FU-B300-C300　　S=1:20
(A3 S=1:40)

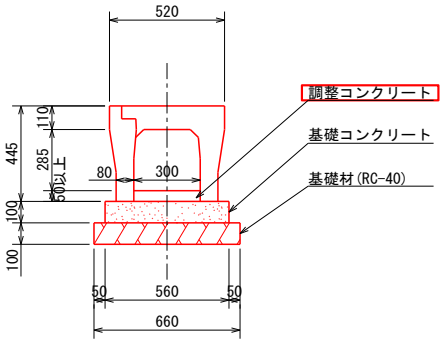


数量表　(10m当り)

| 呼び名 (巾×深) | 参考質量 (kg) | 基礎材(RC-40) (m3) | 基礎材(RC-40) t=100(m2) | 基礎コンクリート (m3) | 型枠 (m2) | 調整コンクリート (m3) |
|---|---|---|---|---|---|---|
| 300 X 300 | 475 | 0.66 | 6.6 | 0.56 | 2.0 | 展開図参照 |

| 呼び名/名称 | 規格 | 計算式 | 単位 | 数量 |
|---|---|---|---|---|
| 調整コンクリート | 18-8-25 | ~~排水構造物展開図(1/4)より~~<br>~~V=(0.096+0.099)/2× 2.00×0.03=0.06　0.06~~<br>~~V=(0.100+0.084)/2× 2.00×0.03=0.06　0.06~~<br><br>~~排水構造物展開図(3/4)より~~<br>~~V=(0.087+0.063)/2× 1.50×0.30=0.03　0.03~~<br>~~V=(0.063+0.083)/2× 2.00×0.30=0.04　0.04~~<br><br>排水構造物展開図(4/4)より<br>V=0.05× 4.00×0.30=0.06　0.06<br><br>合　計　0.06 | m3 | 0.06 |

# 管渠工　延長調書

| 呼び名・名称 | 規格・寸法 | 測　点・計 算 式 | | | 単位 | 数　量 |
|---|---|---|---|---|---|---|
| 横断暗渠 | CSB-I-250 | ~~NO.　0+ 1.16~~ | ~~L=~~ | ~~3.57~~ | | |
| | | NO.11+ 8.40 | L= | 4.17 | | |
| | | 合 計 | L= | 4.17 | m | 4.2 |
| | | | | | | |
| | CSB-I-300 | ~~NO.　0+17.79~~ | ~~L=~~ | ~~4.53~~ | | |
| | | ~~NO.　3+ 0.14~~ | ~~L=~~ | ~~7.65~~ | | |
| | | ~~NO.　8+ 1.65~~ | ~~L=~~ | ~~3.30~~ | | |
| | | NO.14+13.76 | L= | 5.30 | | |
| | | NO.14+19.27 | L= | 8.08 | | |
| | | 合 計 | L= | 13.38 | m | 13.4 |
| | | | | | | |
| | ~~CSB-I-350~~ | ~~NO.　6+ 2.80~~ | ~~L=~~ | ~~3.30~~ | | |
| | | ~~NO.　8+10.81~~ | ~~L=~~ | ~~7.72~~ | | |
| | | ~~合 計~~ | ~~L=~~ | ~~11.02~~ | ~~m~~ | ~~11.0~~ |
| | | | | | | |
| | CSB-I-600 | SP4 | L= | 3.30 | | |
| | | SP4 | L= | 1.48 | | |
| | | 合 計 | L= | 4.78 | m | 4.8 |
| | | | | | | |
| | | | | | | |
| ~~排水取水管~~ | ~~VP150~~ | ~~NO.　6+ 2.80（左側）~~ | ~~L=~~ | ~~0.70~~ | | |
| | | ~~NO.　6+ 2.80（右側）~~ | ~~L=~~ | ~~1.09~~ | | |
| | | ~~合 計~~ | ~~L=~~ | ~~1.79~~ | ~~m~~ | ~~1.8~~ |

# 数量計算書

管渠工　　10m当り　　(1/4)

## 横断暗渠 CSB-I-250

略　図

横断暗渠
CSB-I-(D)　　S=1:20
(A3 S=1:40)

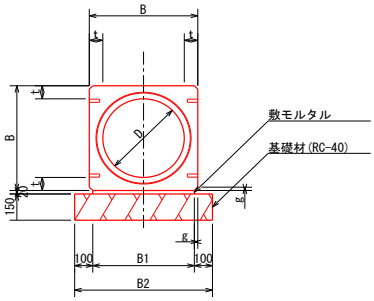


寸法表及び数量表　　(10m当り)

| 呼び径 | 寸法 (mm) | | | | | | 参考質量 | 基礎材(RC-40) | | 敷モルタル |
|---|---|---|---|---|---|---|---|---|---|---|
| | D 内径 | B | t 厚さ | g | B1 | B2 | (kg) | (m3) | t=150(m2) | (m3) |
| 250 | 250 | 362 | 56 | 30 | 302 | 502 | 470 | 0.75 | 5.0 | 0.06 |
| 300 | 300 | 420 | 60 | 30 | 360 | 560 | 610 | 0.84 | 5.6 | 0.07 |
| 350 | 350 | 478 | 64 | 30 | 418 | 618 | 766 | 0.93 | 6.2 | 0.08 |
| 600 | 600 | 786 | 93 | 30 | 726 | 926 | 1960 | 1.40 | 9.3 | 0.15 |

| 呼び名/名称 | 規　格 | 計　算　式 | | 単位 | 数　量 |
|---|---|---|---|---|---|
| 横断暗渠 | CSB-I-250 | N=10.00/2.40=4.17 | 4.17 | 個 | 4.2 |
| 敷モルタル | 1:3　　t= 2cm | V=0.30×0.02×10.00=0.06 | 0.06 | m3 | 0.06 |
| 基礎材 | RC-40　t=15cm | A=0.50×10.00=5.00 | 5.00 | m2 | 5.0 |
| | | | | | |
| | | | | | |
| | | | | | |
| | | | | | |
| | | | | | |
| | | | | | |
| | | | | | |
| | | | | | |
| | | | | | |
| | | | | | |

# 数量計算書

管渠工　　10m当り　　(2/4)

## 横断暗渠 CSB-I-300

略　図

横断暗渠
CSB-I-(D)　　S=1:20
(A3 S=1:40)

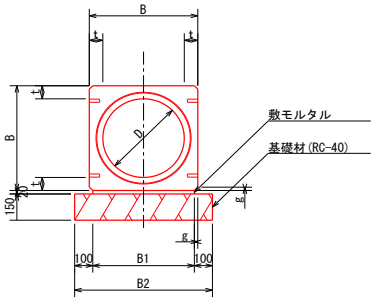


寸法表及び数量表　　(10m当り)

| 呼び径 | 寸法 (mm) D 内径 | B | t 厚さ | g | B1 | B2 | 参考質量 (kg) | 基礎材(RC-40) (m3) | t=150 (m2) | 敷モルタル (m3) |
|---|---|---|---|---|---|---|---|---|---|---|
| 250 | 250 | 362 | 56 | 30 | 302 | 502 | 470 | 0.75 | 5.0 | 0.06 |
| 300 | 300 | 420 | 60 | 30 | 360 | 560 | 610 | 0.84 | 5.6 | 0.07 |
| 350 | 350 | 478 | 64 | 30 | 418 | 618 | 766 | 0.93 | 6.2 | 0.08 |
| 600 | 600 | 786 | 93 | 30 | 726 | 926 | 1960 | 1.40 | 9.3 | 0.15 |

| 呼び名/名称 | 規　格 | 計　算　式 | | 単位 | 数　量 |
|---|---|---|---|---|---|
| 横断暗渠 | CSB-I-300 | N=10.00/2.40=4.17 | 4.17 | 個 | 4.2 |
| 敷モルタル | 1:3　　t= 2cm | V=0.36×0.02×10.00=0.07 | 0.07 | m3 | 0.07 |
| 基礎材 | RC-40　t=15cm | A=0.56×10.00=5.60 | 5.60 | m2 | 5.6 |
| | | | | | |
| | | | | | |
| | | | | | |
| | | | | | |
| | | | | | |
| | | | | | |
| | | | | | |
| | | | | | |
| | | | | | |
| | | | | | |

# 数量計算書

管渠工　　10m当り　　(4/4)

## 横断暗渠 CSB-I-600

略　図

横断暗渠
CSB-I-(D)　　S=1:20
(A3 S=1:40)

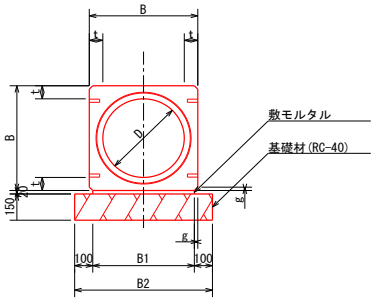


寸法表及び数量表　　(10m当り)

| 呼び径 | 寸法 (mm) D 内径 | B | t 厚さ | g | B1 | B2 | 参考質量 (kg) | 基礎材(RC-40) (m3) | t=150 (m2) | 敷モルタル (m3) |
|---|---|---|---|---|---|---|---|---|---|---|
| 250 | 250 | 362 | 56 | 30 | 302 | 502 | 470 | 0.75 | 5.0 | 0.06 |
| 300 | 300 | 420 | 60 | 30 | 360 | 560 | 610 | 0.84 | 5.6 | 0.07 |
| 350 | 350 | 478 | 64 | 30 | 418 | 618 | 766 | 0.93 | 6.2 | 0.08 |
| 600 | 600 | 786 | 93 | 30 | 726 | 926 | 1960 | 1.40 | 9.3 | 0.15 |

| 呼び名/名称 | 規　格 | 計　算　式 | | 単位 | 数　量 |
|---|---|---|---|---|---|
| 横断暗渠 | CSB-I-600 | N=10.00/2.40=4.17 | 4.17 | 個 | 4.2 |
| 敷モルタル | 1:3　　t= 2cm | V=0.73×0.02×10.00=0.15 | 0.15 | m3 | 0.15 |
| 基礎材 | RC-40　t=15cm | A=0.93×10.00=9.30 | 9.30 | m2 | 9.3 |
| | | | | | |
| | | | | | |
| | | | | | |
| | | | | | |
| | | | | | |
| | | | | | |
| | | | | | |
| | | | | | |
| | | | | | |
| | | | | | |

# 集水桝工数量調書



| 呼び名・名称 | 規格・寸法 | 測　点・計 算 式 | | | 単位 | 数　量 |
|---|---|---|---|---|---|---|
| 集水桝 | M1-B500×L500×H600 | ~~NO. 0+ 1.84 (左側)~~ | ~~N=~~ | ~~1~~ | | |
| | | ~~NO. 2+ 5.20 (左側)~~ | ~~N=~~ | ~~1~~ | | |
| | | ~~NO. 8+ 1.65 (左側)~~ | ~~N=~~ | ~~1~~ | | |
| | | ~~NO.10+ 2.74 (左側)~~ | ~~N=~~ | ~~1~~ | | |
| | | NO.11+ 9.68 (左側) | N= | 1 | | |
| | | ~~NO. 0+ 0.49 (右側)~~ | ~~N=~~ | ~~1~~ | | |
| | | ~~NO. 6+10.45 (右側)~~ | ~~N=~~ | ~~1~~ | | |
| | | ~~NO. 8+ 1.65 (右側)~~ | ~~N=~~ | ~~1~~ | | |
| | | NO.11+ 7.12 (右側) | N= | 1 | | |
| | | 合 計 | N= | 2 | 基 | 2 |
| | | | | | | |
| | M1-B500×L500×H1000 | NO.14+13.85 (左側) | N= | 1 | | |
| | | 合 計 | N= | 1 | 基 | 1 |
| | | | | | | |
| | ~~M1-B600×L600×H600~~ | ~~NO. 3+ 1.69 (左側)~~ | ~~N=~~ | ~~1~~ | | |
| | | ~~NO. 6+ 6.28 (左側)~~ | ~~N=~~ | ~~1~~ | | |
| | | ~~NO. 0+18.54 (右側)~~ | ~~N=~~ | ~~1~~ | | |
| | | ~~NO. 6+ 6.28 (右側)~~ | ~~N=~~ | ~~1~~ | | |
| | | ~~合 計~~ | ~~N=~~ | ~~4~~ | ~~基~~ | ~~4~~ |
| | | | | | | |
| | ~~M1-B600×L600×H700~~ | ~~NO. 8+11.51 (左側)~~ | ~~N=~~ | ~~1~~ | | |
| | | ~~合 計~~ | ~~N=~~ | ~~1~~ | ~~基~~ | ~~1~~ |
| | | | | | | |
| | ~~M1-B600×L600×H800~~ | ~~NO. 3+18.55 (右側)~~ | ~~N=~~ | ~~1~~ | | |
| | | ~~合 計~~ | ~~N=~~ | ~~1~~ | ~~基~~ | ~~1~~ |
| | | | | | | |
| | M1-B600×L900×H1000 | SP4 (左側) | N= | 1 | | |
| | | SP4 (右側) | N= | 1 | | |
| | | 合 計 | N= | 2 | 基 | 2 |
| | | | | | | |
| | | | | | | |
| | | | | | | |

# 集水桝工数量調書



| 呼び名・名称 | 規格・寸法 | 測　点・計 算 式 | | | 単位 | 数　量 |
|---|---|---|---|---|---|---|
| 集水桝 | M1-B700×L700×H1200 | NO.15+ 1.44 (右側) | N= | 1 | | |
| | | 合 計 | N= | 1 | 基 | 1 |
| | | | | | | |
| | ~~M1-B300×L400×H500~~ | ~~NO. 3+13.37 (左側)~~ | ~~N=~~ | ~~1~~ | | |
| | | ~~合 計~~ | ~~N=~~ | ~~1~~ | ~~基~~ | ~~1~~ |
| | | | | | | |
| | | | | | | |
| 蓋版 | SG3-B500×500 | N=(2+1) | N= | 3 | | |
| | | 合 計 | N= | 3 | 枚 | 3 |
| | | | | | | |
| | ~~SG3-B600×600~~ | ~~N=(4+1+1)~~ | ~~N=~~ | ~~6~~ | | |
| | | ~~合 計~~ | ~~N=~~ | ~~6~~ | ~~枚~~ | ~~6~~ |
| | | | | | | |
| | SG3-B600×900 | N=(1+1) | N= | 2 | | |
| | | 合 計 | N= | 2 | 枚 | 2 |
| | | | | | | |
| | SG3-B700×700 | | N= | 1 | | |
| | | 合 計 | N= | 1 | 枚 | 1 |
| | | | | | | |
| | ~~SG3-B300×400~~ | | ~~N=~~ | ~~1~~ | | |
| | | ~~合 計~~ | ~~N=~~ | ~~1~~ | ~~枚~~ | ~~1~~ |

# 数量計算書

集水桝工　　1基当り　　(1/8)

## 集水桝 M1-B500×L500×H600

略　図

M1-B500×L500×H600　　S=1:20
(A3 S=1:40)

平 面 図

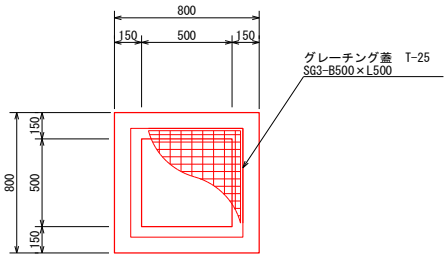


側 面 図

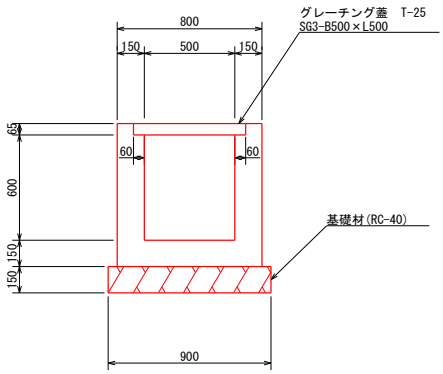


(1基当り)

| 集水桝名称 | コンクリート | 基礎材(RC-40) | | 型 枠 |
|---|---|---|---|---|
| | ( m3 ) | ( m3 ) | ( m2 ) | ( m2 ) |
| M1-B500×L500×H600 | 0.31 | 0.12 | 0.81 | 3.7 |

| 呼び名/名称 | 規 格 | 計 算 式 | 単位 | 数 量 |
|---|---|---|---|---|
| コンクリート | 18-8-25 | 新潟県土木部標準設計図集より | m3 | 0.31 |
| 型枠 | 無筋 | 〃 | m2 | 3.70 |
| 基礎材 | RC-40 t=15cm | 〃 | m2 | 0.81 |
| グレーチング蓋 | SG3-B500×L500 | | 枚 | 1.0 |
| | | | | |
| | | | | |
| | | | | |
| | | | | |
| | | | | |
| | | | | |
| | | | | |
| | | | | |
| | | | | |

# 数量計算書

集水桝工　　1基当り　　(2/8)

## 集水桝 M1-B500×L500×H1000

略　図

M1-B500×L500×H1000　　S=1:20
(A3 S=1:40)

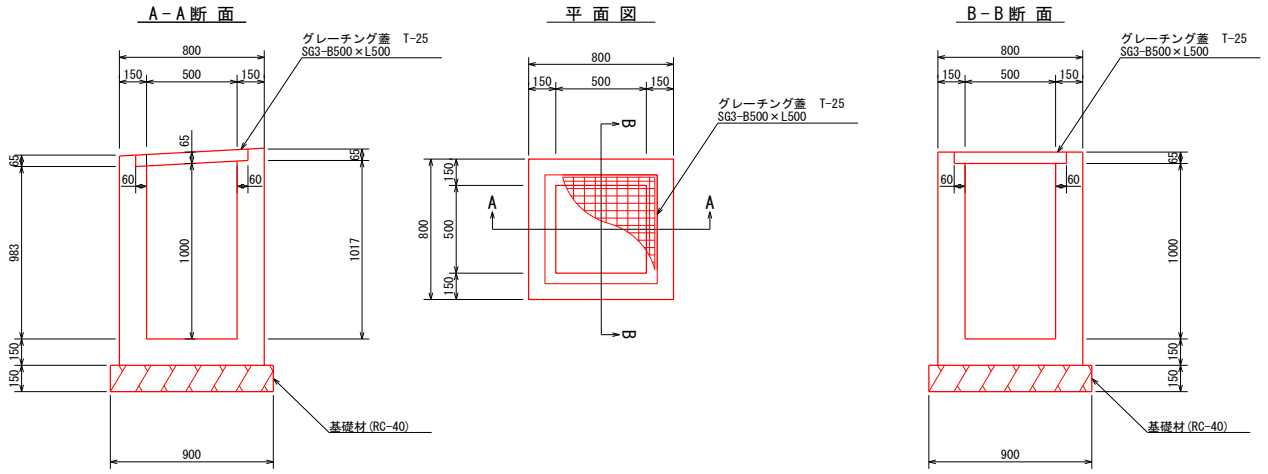


(1基当り)

| 集水桝名称 | コンクリート | 基礎材(RC-40) | | 型　枠 |
|---|---|---|---|---|
| | (m3) | (m3) | (m2) | (m2) |
| M1-B500×L500×H1000 | 0.81 | 0.12 | 0.81 | 5.8 |

| 呼び名/名称 | 規　格 | 計　算　式 | 単位 | 数　量 |
|---|---|---|---|---|
| コンクリート | 18-8-25 | 新潟県土木部標準設計図集より | m3 | 0.81 |
| 型枠 | 無筋 | 〃 | m2 | 5.80 |
| 基礎材 | RC-40　t=15cm | 〃 | m2 | 0.81 |
| グレーチング蓋 | SG3-B500×L500 | | 枚 | 1.0 |
| | | | | |
| | | | | |
| | | | | |
| | | | | |
| | | | | |
| | | | | |
| | | | | |
| | | | | |
| | | | | |

# 数量計算書

集水桝工　　1基当り　　(6/8)

## 集水桝 M1-B600×L900×H1000

略　図

M1-B600×L900×H1000　　S=1:20
(A3 S=1:40)

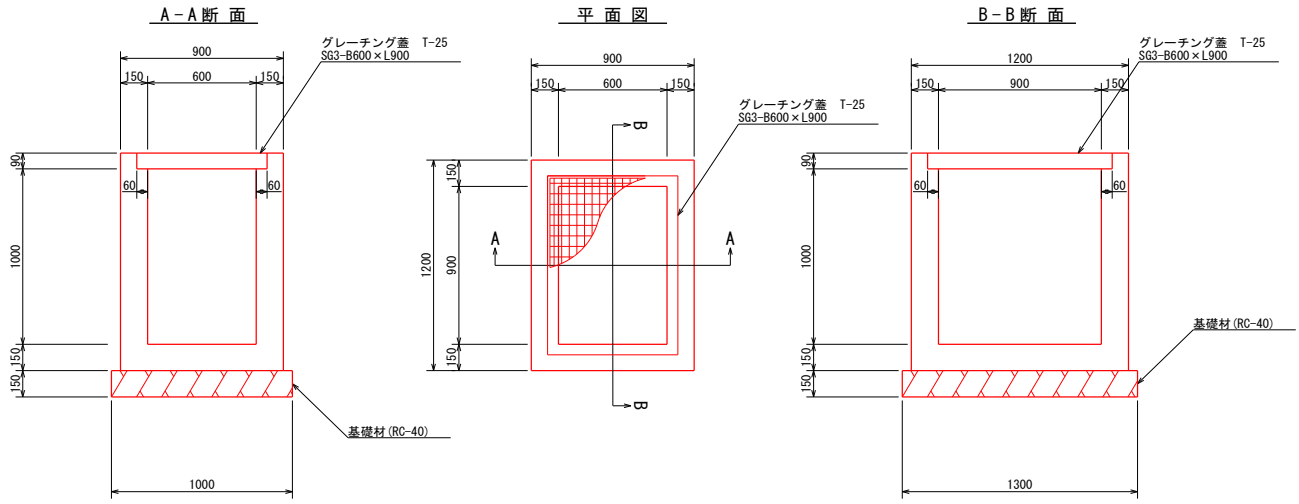


(1基当り)

| 集水桝名称 | コンクリート | 基礎材(RC-40) | | 型　枠 |
|---|---|---|---|---|
| | (m3) | (m3) | (m2) | (m2) |
| M1-B600×L900×H1000 | 0.59 | 0.20 | 1.30 | 6.9 |

| 呼び名/名称 | 規　格 | 計　算　式 | 単位 | 数　量 |
|---|---|---|---|---|
| コンクリート | 18-8-25 | 新潟県土木部標準設計図集より | m3 | 0.59 |
| 型枠 | 無筋 | 〃 | m2 | 6.90 |
| 基礎材 | RC-40　t=15cm | 〃 | m2 | 1.30 |
| グレーチング蓋 | SG3-B600×L900 | | 枚 | 1.0 |
| | | | | |
| | | | | |
| | | | | |
| | | | | |
| | | | | |
| | | | | |
| | | | | |
| | | | | |
| | | | | |

# 数量計算書

集水桝工　　1基当り　　(7/8)

## 集水桝 M1-B700×L700×H1200

略　図

M1-B700×L700×H1200　　S=1:20
(A3 S=1:40)

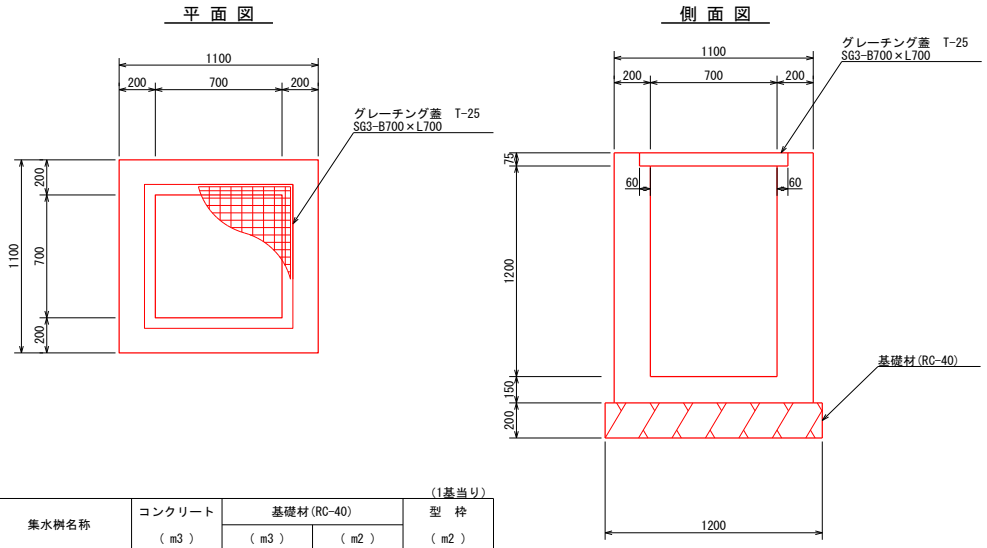


(1基当り)

| 集水桝名称 | コンクリート | 基礎材(RC-40) | | 型　枠 |
|---|---|---|---|---|
| | ( m3 ) | ( m3 ) | ( m2 ) | ( m2 ) |
| M1-B700×L700×H1200 | 0.59 | 0.29 | 1.44 | 9.2 |

| 呼び名/名称 | 規　格 | 計　算　式 | 単位 | 数　量 |
|---|---|---|---|---|
| コンクリート | 18-8-25 | 新潟県土木部標準設計図集より | m3 | 0.59 |
| 型枠 | 無筋 | 〃 | m2 | 9.20 |
| 基礎材 | RC-40　t=15cm | 〃 | m2 | 1.44 |
| グレーチング蓋 | SG3-B700×L700 | | 枚 | 1.0 |
| | | | | |
| | | | | |
| | | | | |
| | | | | |
| | | | | |
| | | | | |
| | | | | |
| | | | | |
| | | | | |

# 数量調書

工種　　消雪施設工

1工区

| 種　別 | 細　別 | 規　格 | 単　位 | 数　量 | 備　考 |
|---|---|---|---|---|---|
| 作業土工 | | | | | |
| | 床掘 | | m3 | 1.4 | |
| | 埋戻 | 転用土 | m3 | 0.5 | |
| | 埋戻 | 山砂 | m3 | 1.0 | |
| | 残土処理 | | m3 | 0.9 | 1.4-0.5 |
| ~~散水管配管~~ | | | | | |
| | ~~散水管~~ | ~~B300×H300　Φ50~~ | ~~m~~ | ~~6.6~~ | |
| 送水管配管 | | | | | |
| | 送水管 | HIVP-50A | m | 5.5 | |
| | 継手材 | HI90°　L-50A | 個 | 2 | |
| | | ストラブ・グリップ 316-50E | 個 | 2 | |
| ~~既設設備撤去~~ | | | | | |
| | ~~既設設備撤去~~ | ~~取水ポンプ3.7kw ケーシング口径900mm~~ | ~~式~~ | ~~1~~ | |
| | | | | | |
| | | | | | |
| | | | | | |
| | | | | | |
| | | | | | |
| | | | | | |
| | | | | | |
| | | | | | |

# 数量計算書

作業土工　　1式当り

## 送水管配管

略　図

A－A断 面

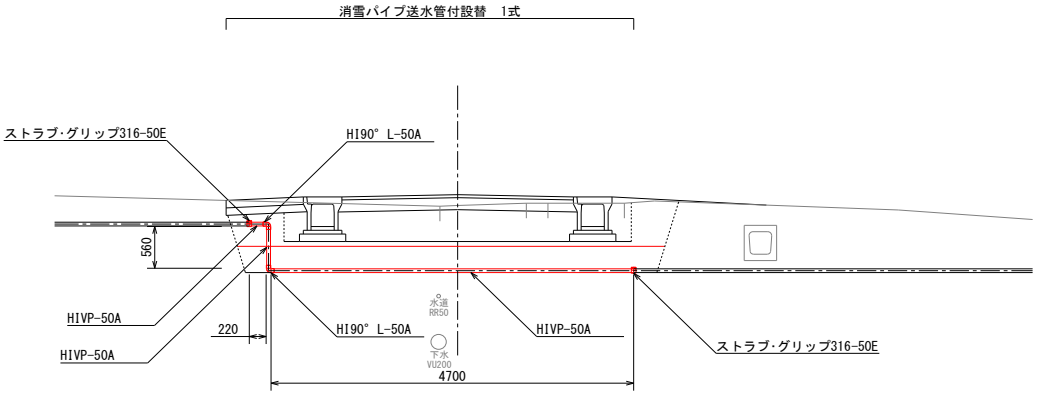


B－B断 面

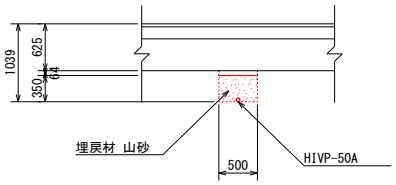


作業土工
(L=0.50m)

| | | |
|---|---|---|
| 床掘 | m2 | 2.8 |
| 埋戻 | m2 | 0.9 |
| 埋戻(山砂) | m2 | 1.9 |

| 細別 | 規格 | 計　算　式 | | 単位 | 数　量 |
|---|---|---|---|---|---|
| 送水管配管 | | | | | |
| 床掘 | | V=2.8×0.50=1.40 | 1.40 | m3 | 1.4 |
| 埋戻 | 転用土 | V=0.9×0.50=0.45 | 0.45 | m3 | 0.5 |
| 埋戻 | 山砂 | V=1.9×0.50=0.95 | 0.95 | m3 | 1.0 |

# 数量計算書

送水管配管　　1式当り

## 送水部

略　図

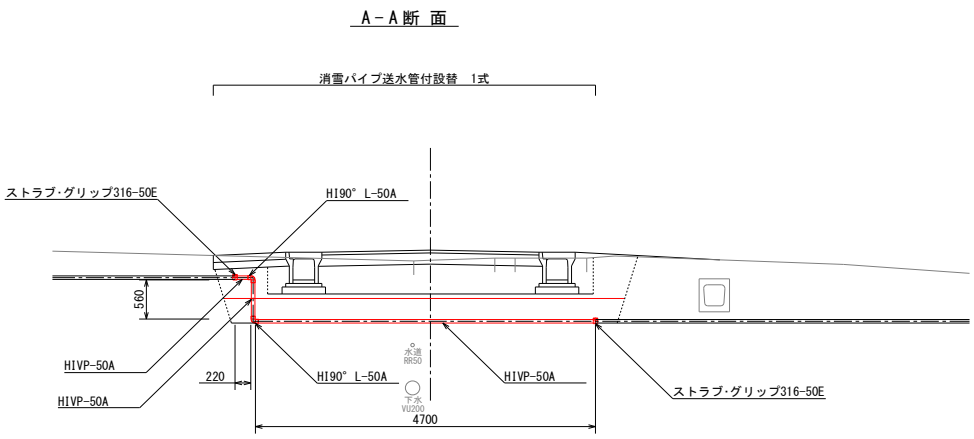


数量表（参考）　（1式当り）

| 項　目 | 材　料 | 単位 | 数量 |
|---|---|---|---|
| 消雪パイプ送水管付設替 | HIVP-50A | m | 5.5 |
| | HI90° L-50A | 個 | 2 |
| | ストラブ・グリップ316-50E | 個 | 2 |

| 呼び名/名称 | 規　格 | 計　算　式 | 単位 | 数　量 |
|---|---|---|---|---|
| 送水管 | HIVP-50A | L=4.70+0.56+0.22=5.48　5.48 | m | 5.5 |
| 継手材 | HI90° L-50A | 消雪施設詳細図より | 個 | 2 |
| | ストラブ・グリップ316-50E | 〃 | 個 | 2 |
| | | | | |
| | | | | |
| | | | | |
| | | | | |
| | | | | |
| | | | | |
| | | | | |
| | | | | |
| | | | | |
| | | | | |

# 数量調書

工種　　構造物撤去工

1工区

| 種　別 | 細　別 | 規　格 | 単　位 | 数　量 | 備　考 |
|---|---|---|---|---|---|
| 構造物取壊し工 | | | | | |
| | 舗装版取壊し | AS舗装 t= 4cm | m2 | 295.8 | |
| | | CO舗装 t=10cm | m2 | 99.5 | |
| | 舗装版切断 | AS舗装 t= 4cm | m | 26.5 | |
| | | CO舗装　t=10cm | m | 30.0 | |
| | コンクリート構造物取壊し | 有筋 | m3 | 9.5 | |
| | | 無筋 | m3 | 1.2 | |
| 排水構造物撤去工 | | | | | |
| | U型側溝撤去 | プレキャスト | m | 33.6 | 2.4　m3 |
| | 蓋版撤去 | プレキャスト | 枚 | 47 | 0.8　m3 |
| | ~~L型側溝撤去~~ | ~~プレキャスト~~ | ~~m~~ | ~~94.0~~ | ~~2.8~~ ~~m3~~ |
| | ヒューム管撤去 | プレキャスト | m | 4.2 | 0.1　m3 |
| | 組合せ暗渠撤去 | プレキャスト | m | 3.9 | 1.4　m3 |
| | ~~集水桝撤去~~ | ~~プレキャスト~~ | ~~基~~ | ~~2~~ | ~~0.2~~ ~~m3~~ |
| ~~縁石撤去工~~ | | | | | |
| | ~~歩車道境界ブロック撤去~~ | ~~プレキャスト~~ | ~~m~~ | ~~9.0~~ | ~~0.5~~ ~~m3~~ |
| | | | | | |
| | | | | | |
| | | | | | |
| | | | | | |
| | | | | | |

# 数量計算書

構造物撤去工　　1式当り

## 構造物取壊し工　排水構造物撤去工　縁石撤去工

略　図

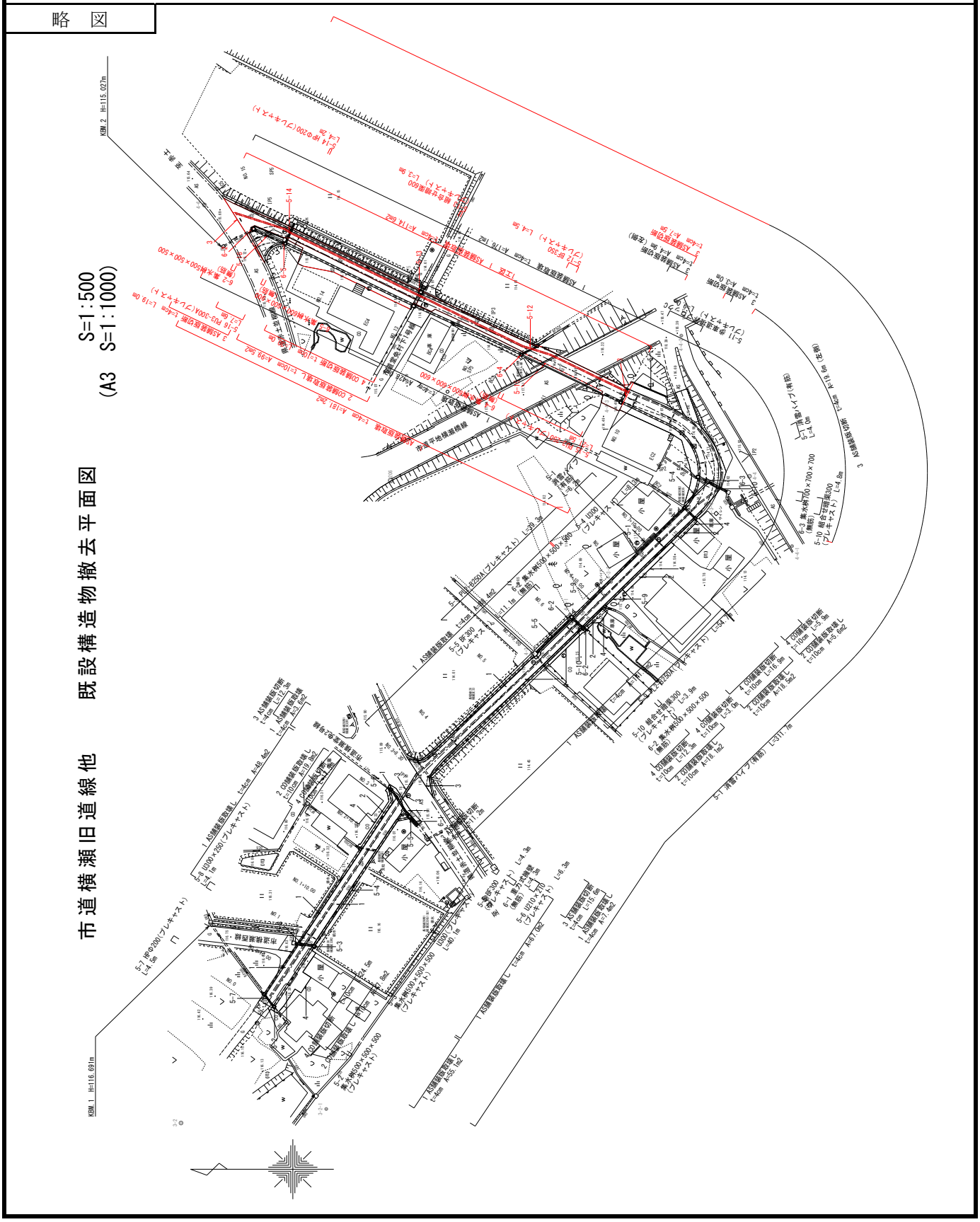

# 構造物取壊し工

| 呼び名/名称 | 規　格 | 計　算　式 | | 単位 | 数　量 |
|---|---|---|---|---|---|
| 舗装版取壊し | AS舗装 t= 4cm | A=181.2+114.6=295.8 | 295.8 | m2 | 295.8 |
| | CO舗装 t=10cm | A=99.5 | 99.5 | m2 | 99.5 |
| 舗装版切断 | AS舗装 t= 4cm | L=7.5+19.0=26.5 | 26.5 | m | 26.5 |
| | CO舗装 t=10cm | L=30.0 | 30.0 | m | 30.0 |
| コンクリート構造物取壊し | 有筋 | | | | |
| | 消雪パイプ 300×300 | L=106.0m<br>V=0.09×106.0=9.54 | 9.54 | m3 | 9.5 |
| | 無筋 | | | | |
| | ~~重力式擁壁~~ | ~~L=4.3m~~<br>~~V=0.13×4.30=0.56~~ | ~~0.56~~ | | |
| | 集水桝500×500×500 | N=1基<br>V=(0.80×0.80×0.65-0.50×0.50<br>×0.50)×①=0.29 | 0.29 | | |
| | ~~集水桝700×700×700~~ | ~~N=1基~~<br>~~V=(1.00×1.00×0.85-0.70×0.70~~<br>~~×0.70)×①=0.51~~ | ~~0.51~~ | | |
| | 集水桝600×600×600 | N=1基<br>V=(0.90×0.90×0.75-0.60×0.60<br>×0.60)×①=0.39 | 0.39 | | |
| | 集水桝600×600×900 | N=1基<br>V=(0.90×0.90×1.05-0.60×0.60<br>×0.90)×①=0.53 | 0.53 | | |
| | | 合　計 | 1.21 | m3 | 1.2 |

# 排水構造物撤去工



| 呼び名/名称 | 規　格 | 計　算　式 | | 単位 | 数　量 |
|---|---|---|---|---|---|
| U型側溝撤去 | プレキャスト | | | | |
| | ~~U300×300~~ | ~~L=48.4m~~ | ~~48.40~~ | ~~m~~ | ~~48.4~~ |
| | | ~~V=0.06×48.4=2.90~~ | ~~2.90~~ | ~~m3~~ | ~~2.9~~ |
| | ~~U210×210~~ | ~~L= 6.3m~~ | ~~6.30~~ | ~~m~~ | ~~6.3~~ |
| | | ~~V=0.05× 6.30=0.32~~ | ~~0.32~~ | ~~m3~~ | ~~0.3~~ |
| | ~~U300×250~~ | ~~L= 4.1m~~ | ~~4.10~~ | ~~m~~ | ~~4.1~~ |
| | | ~~V=0.05× 4.10=0.21~~ | ~~0.21~~ | ~~m3~~ | ~~0.2~~ |
| | ~~BF300~~ | ~~L=15.4m~~ | ~~15.40~~ | ~~m~~ | ~~15.4~~ |
| | | ~~V=0.03×15.40=0.46~~ | ~~0.46~~ | ~~m3~~ | ~~0.5~~ |
| | BF350 | L= 4.5m | 4.50 | m | 4.5 |
| | | V=0.04× 4.50=0.18 | 0.18 | m3 | 0.2 |
| | PU3-250 | L=21.5m | 21.50 | m | 21.5 |
| | | V=0.07×21.50=1.51 | 1.51 | m3 | 1.5 |
| | PU3-300A | L= 7.6m | 7.60 | m | 7.6 |
| | | V=0.09× 7.60=0.68 | 0.68 | m3 | 0.7 |
| | | 計 | 33.60 | m | 33.6 |
| | | 計 | 2.37 | m3 | 2.4 |
| 蓋版撤去 | プレキャスト | | | | |
| | ~~U210×210~~ | ~~N=13 (B300-L500-T60)~~ | ~~13.00~~ | ~~枚~~ | ~~13~~ |
| | | ~~V=0.02×13×0.50=0.13~~ | ~~0.13~~ | ~~m3~~ | ~~0.1~~ |
| | ~~U300×250~~ | ~~N= 8 (B360-L500-T90)~~ | ~~8.00~~ | ~~枚~~ | ~~8~~ |
| | | ~~V=0.03× 8×0.50=0.12~~ | ~~0.12~~ | ~~m3~~ | ~~0.1~~ |
| | BF350 | N= 4 (B440-L1000-T70) | 4.00 | 枚 | 4 |
| | | V=0.03× 4×1.00=0.12 | 0.12 | m3 | 0.1 |
| | PU3-250 | N=43 (B370-L500-T90) | 43.00 | 枚 | 43 |
| | | V=0.03×43×0.50=0.65 | 0.65 | m3 | 0.7 |
| | | 計 | 47.00 | 枚 | 47 |
| | | 計 | 0.77 | m3 | 0.8 |
| ~~L型側溝撤去~~ | ~~プレキャスト~~ | | | | |
| | ~~PL2-250A~~ | ~~L=94.0m~~ | ~~94.00~~ | ~~m~~ | ~~94.0~~ |
| | | ~~V=0.03×94.0=2.82~~ | ~~2.82~~ | ~~m3~~ | ~~2.8~~ |
| | | ~~計~~ | ~~94.00~~ | ~~m~~ | ~~94.0~~ |
| | | ~~計~~ | ~~2.82~~ | ~~m3~~ | ~~2.8~~ |
| ヒューム管撤去 | プレキャスト | | | | |
| | ~~Φ200~~ | ~~L= 4.5m~~ | ~~4.50~~ | ~~m~~ | ~~4.5~~ |
| | | ~~V=0.02× 4.50=0.09~~ | ~~0.09~~ | ~~m3~~ | ~~0.1~~ |
| | Φ250 | L= 4.2m | 4.20 | m | 4.2 |
| | | V=0.02× 4.20=0.08 | 0.08 | m3 | 0.1 |
| | | 計 | 4.20 | m | 4.2 |
| | | 計 | 0.08 | m3 | 0.1 |

# 排水構造物撤去工



| 呼び名/名称 | 規　格 | 計　算　式 | | 単位 | 数　量 |
|---|---|---|---|---|---|
| 組合せ暗渠撤去 | プレキャスト | | | | |
| | ~~300~~ | ~~L= 8.7m~~ | ~~8.70~~ | ~~m~~ | ~~8.7~~ |
| | | ~~V=0.11× 8.70=0.96~~ | ~~0.96~~ | ~~m3~~ | ~~1.0~~ |
| | 600 | | | | |
| | | L= 3.9m | 3.90 | m | 3.9 |
| | | V=0.35× 3.90=1.37 | 1.37 | m3 | 1.4 |
| | | 計 | 3.90 | m | 3.9 |
| | | 計 | 1.37 | m3 | 1.4 |
| 集水桝撤去 | プレキャスト | | | | |
| | ~~500×500×500~~ | ~~N= 1~~ | ~~1.00~~ | ~~基~~ | ~~1~~ |
| | | ~~V=(0.60×0.60×0.55-0.50×0.50 ×0.50)×①=0.07~~ | ~~0.07~~ | ~~m3~~ | ~~0.1~~ |
| | ~~分水桝I型~~ | ~~N= 1~~ | ~~1.00~~ | ~~基~~ | ~~1~~ |
| | | ~~V=(0.62×0.62×0.55-0.50×0.50 ×0.49)×①=0.09~~ | ~~0.09~~ | ~~m3~~ | ~~0.1~~ |
| | | ~~計~~ | ~~2.00~~ | ~~基~~ | ~~2~~ |
| | | ~~計~~ | ~~0.16~~ | ~~m3~~ | ~~0.2~~ |